\\Bilt\projects\Metro PCS\SF0902 (855-225A) Pearse Building\1- ZD's\v4-100% ZDs Sent 06-28-12\SF0902_T-1.dwg, 7/16/2012 4:08:00 PM, Josh Minkel, Omni Design Group, HP8150-Arch.pc3

metroPCS

PEARSE BUILDING
SF0902
1801 MURCHISON DRIVE
BURLINGAME, CA 94010
COUNTY OF SAN MATEO

LANDLORD/OWNER

CONSTRUCTION MANAGER

LEASING

PLANNING

RF ENGINEER

NET OPS

UTILITIES COORDINATOR

APPROVALS

SUBMITTAL NO.	DESCRIPTION	DATE
P1	90% ZONING DRAWINGS, DESIGN REVIEW	06/15/12
P2	100% ZONING DRAWINGS, ISSUED FOR ZONING SUBMITTAL	06/28/12

SUBMITTAL RECORD

APPLICANT/LESSEE

COMPANY:	METRO PCS, INC.
ADDRESS:	1080 MARINA VILLAGE PKWY, 4TH FLOOR
CITY, STATE, ZIP	ALAMEDA, CA 94501
CONTACT:	ROWENA OKIALDA
PHONE:	510.706.8886
FAX:	510.748.1823

PROPERTY OWNER

COMPANY:	CALIFORNIA PACIFIC PROPERTIES
ADDRESS:	1801 MURCHISON DRIVE
CITY, STATE, ZIP	BURLINGAME, CA 94010
CONTACT:	KENT PEARSE
PHONE:	650.692.6200
FAX:	

LEASING/ZONING

COMPANY:	THE CBR GROUP, INC.
ADDRESS:	1168 LARKING WAY
CITY, STATE, ZIP	NAPA, CA 94558
CONTACT:	CHRISTY BELTRAN ROBERTS
PHONE:	415.806.2323
E-MAIL:	CHRISTY@THECBRGROUP.COM

ARCHITECT

COMPANY:	OMNI DESIGN GROUP
ARCHITECT:	THOMAS REAY, C19442
ADDRESS:	689 TANK FARM ROAD, SUITE 140
CITY, STATE, ZIP	SAN LUIS OBISPO, CA 93401
CONTACT:	SETH McIVER
PHONE:	805.544.9700
FAX:	805.544.4327

RF ENGINEER

COMPANY:	ERICSSON
ADDRESS:	
CITY, STATE, ZIP	
CONTACT:	
PHONE:	
FAX:	

PROJECT TEAM

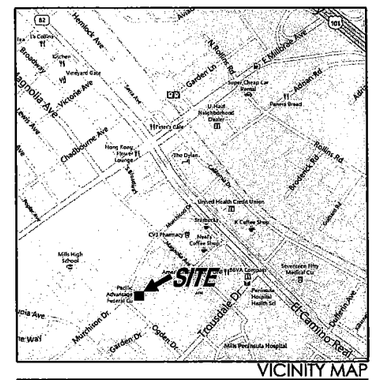

VICINITY MAP

SCALE: NONE

DRIVING DIRECTIONS

FROM METRO'S OFFICES: DEPART MARINA VILLAGE PKWY TOWARD MARINA VILLAGE PLAZA, TURN RIGHT ONTO CONSTITUTION WAY, BEAR RIGHT ONTO CA-260 NORTH / WEBSTER ST. ROAD NAME CHANGES TO HARRISON ST, TURN RIGHT ONTO 7TH ST, TURN RIGHT ONTO JACKSON ST, TAKE RAMP FOR I-880 NORTH TOWARD SAN FRANCISCO, TAKE RAMP LEFT FOR I-80 WEST TOWARD SAN FRANCISCO / BAY BRIDGE, KEEP STRAIGHT ONTO US-101 SOUTH / JAMES LICK FWY, AT EXIT 420, TAKE RAMP RIGHT AND FOLLOW SIGNS FOR MILLBRAE AVE, TURN RIGHT ONTO E MILLBRAE AVE, TURN LEFT ONTO CA-82 SOUTH / S EL CAMINO REAL, TURN RIGHT ONTO MURCHISON DR, ARRIVE AT 1801 MURCHISON DR, CA 94030

PROPERTY INFORMATION

AREA OF CONSTRUCTION:	104 SQFT
EXISTING OCCUPANCY TYPE:	B-4
EXISTING CONSTRUCTION TYPE:	II
TELECOM FACILITY OCCUPANCY TYPE:	U
TELECOM FACILITY CONSTRUCTION TYPE:	VB
CURRENT ZONING:	C-3
A.P.N.:	025-121-150

COORDINATES: NAD 83

LATITUDE: N 37° 35' 37.14"
LONGITUDE: W 122° 23' 18.31"

HANDICAP REQUIREMENTS:
FACILITY IS UNMANNED AND NOT FOR HUMAN HABITATION, HANDICAPPED ACCESS NOT REQUIRED.

JURISDICTION: CITY OF BURLINGAME
PLANNING DIVISION (650) 558-7250

UTILITY PROVIDERS:

POWER: N/A

TELCO: N/A

PROJECT INFORMATION

METRO PCS PROPOSES TO INSTALL:

(1) 15"Ø DIRECTIONAL ANTENNA ON EXISTING PENTHOUSE

(1) COAXIAL CABLE FROM EQUIPMENT TO NEW ANTENNA

PROJECT DESCRIPTION

SHEET	DESCRIPTION
T-1	TITLE SHEET
A-1	OVERALL SITE PLAN
A-2	EQUIPMENT AND ANTENNA PLAN
A-3	ELEVATIONS

SHEET INDEX

1. CALIFORNIA BUILDING CODE - TITLE 24, AS ADOPTED BY THE CALIFORNIA BUILDING STANDARDS COMMISSION, LATEST ADOPTED EDITION.
   PART 1, BUILDING STANDARDS ADMINISTRATIVE CODE
   PART 2, CALIFORNIA BUILDING CODE
   PART 3, CALIFORNIA ELECTRICAL CODE
   PART 4, CALIFORNIA MECHANICAL CODE
   PART 5, CALIFORNIA PLUMBING CODE
   PART 6, CALIFORNIA ENERGY CODE
   PART 8, CALIFORNIA HISTORICAL BUILDING CODE
   PART 9, CALIFORNIA FIRE CODE
   PART 10, CALIFORNIA EXISTING BUILDING CODE
   PART 11, CALIFORNIA GREEN BUILDING STANDARDS CODE
   PART 12, CALIFORNIA REFERENCE STANDARDS CODE
2. THE CALIFORNIA ADMINISTRATIVE CODE, TITLE 19 (INDUSTRIAL RELATIONS, PUBLIC SAFETY)
3. THE CALIFORNIA OCCUPATIONAL SAFETY AND HEALTH ACT
4. THE CALIFORNIA ENVIRONMENTAL QUALITY ACT, LATEST EDITION
5. REQUIREMENTS OF THE REGIONAL WATER BOARD
6. AIR QUALITY MANAGEMENT DISTRICT REGULATIONS

CODE COMPLIANCE

metroPCS
METRO PCS, INC
1080 MARINA VILLAGE PARKWAY
4th FLOOR
ALAMEDA, CA 94501
PHONE: 510.523.2610
FAX: 510.748.1823

ARCHITECT:

omni DESIGN GROUP
Architecture
Civil Engineering
Surveying
Telecommunications
689 Tank Farm Road, Suite 140
San Luis Obispo, California 93401
Phone: (805) 544-9700
www.omnidesigngroup.com
email: omni@odgslo.com

CONSULTANT:

SEAL:

REV.:	DATE:	DESCRIPTION:	BY:

DRAWN BY:	CHK.:	APV.:
JM	SM	TR

CURRENT ISSUE DATE:
06/28/12

ISSUED FOR:
100% ZONING

PROJECT INFORMATION:
PEARSE BUILDING
SF0902
1801 MURCHISON DRIVE
BURLINGAME, CA 94010
COUNTY OF SAN MATEO
APN: 025-121-150

SHEET TITLE:
TITLE SHEET

SHEET NUMBER: T-1

REVISION:

855-225A

\\Bit\projects\Metro PCS\SF0902 (855-225A) Pearse Building\1- ZD's\4-100% ZDs Sent 06-28-12\SF0902_A-1 - A-3.dwg, 7/16/2012 4:08:21 PM, Josh Minkel, Omni Design Group, HP8150-Arch.pc3

Antenna Sector	# of Antennas	Azimuth	Rad Center	Antenna Make/Model	Antenna Size	Antenna Weight	Main Cable Length	Cable Qty.	Cable Size	Cable # and Port #	Color Code	Comments
MW	1	86.7°	±45'-6"	ERICSSON ANT 2.0 0.3 38 HP	15"Ø	48.42 lbs	90'±	1	3/8"Ø	Tx/Rx 7/7 Rx - 8/8	Orange White/Orange	To SF0700

NOTE:
1. ALL AZIMUTHS REFERENCE TRUE NORTH. ALL ELEVATIONS REFERENCE ADJACENT GRADE.
2. AZIMUTH SHOWN IS PRELIMINARY. CONTRACTOR SHALL INSTALL ANTENNAS TO CONFORM TO THE SITE BUILD FORM PROVIDED BY METRO PCS.
3. CONTRACTOR SHALL NOTIFY THE PROJECT MANAGER SHOULD ANY VARIATION IN AZIMUTH, BETWEEN THAT INDICATED HEREIN AND THAT SPECIFIED ON THE SITE BUILD FORM, CREATE POSSIBLE IMPACT OR DEGRADATION OF SITE PERFORMANCE.
4. VERIFY ANTENNA MAKE AND MODEL NUMBER WITH THE RF ENGINEER PRIOR TO THE START OF CONSTRUCTION.
5. MECHANICAL TILT: IN DEGREES, POSITIVE VALUE IS DOWN, ELECTRICAL TILT: IN DEGREES, POSITIVE VALUE IS DOWN

31 RF DATA CHART
NONE

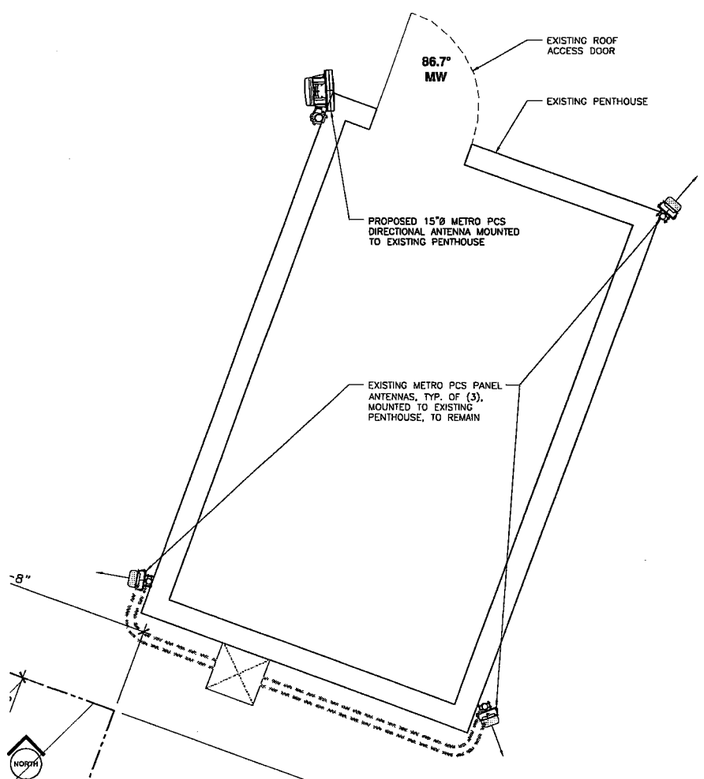

54 ANTENN PLAN
1/4"=1'-0"

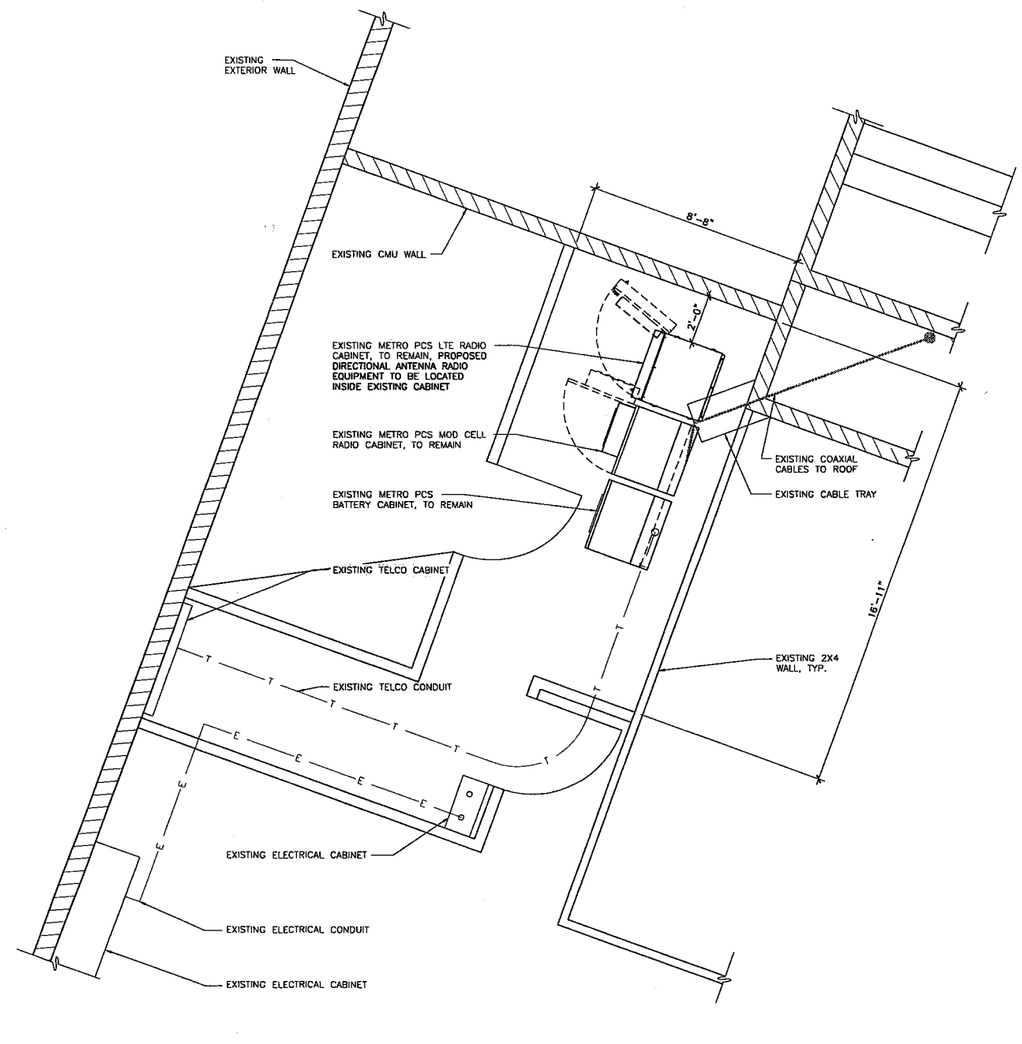

34 EQUIPMENT PLAN
1/4"=1'-0"

metroPCS
METRO PCS, INC
1080 MARINA VILLAGE PARKWAY
4th FLOOR
ALAMEDA, CA 94501
PHONE: 510.523.2610
FAX: 510.748.1823

ARCHITECT:
Architecture
Civil Engineering
Surveying
Telecommunications
omni DESIGN GROUP
689 Tank Farm Road, Suite 140
San Luis Obispo, California 93401
Phone: (805) 544-9700
www.omnidesigngroup.com
email: omni@odgslo.com

CONSULTANT:

SEAL:

REV.:	DATE:	DESCRIPTION:	BY:

DRAWN BY:	CHK.:	APV.:
JM	SM	TR

CURRENT ISSUE DATE:
06/28/12

ISSUED FOR:
100% ZONING

PROJECT INFORMATION:
PEARSE BUILDING
SF0902
1801 MURCHISON DRIVE
BURLINGAME, CA 94010
COUNTY OF SAN MATEO
APN: 025-121-150

SHEET TITLE:
EQUIPMENT AND ANTENNA PLAN

SHEET NUMBER: REVISION:
A-2

855-225A

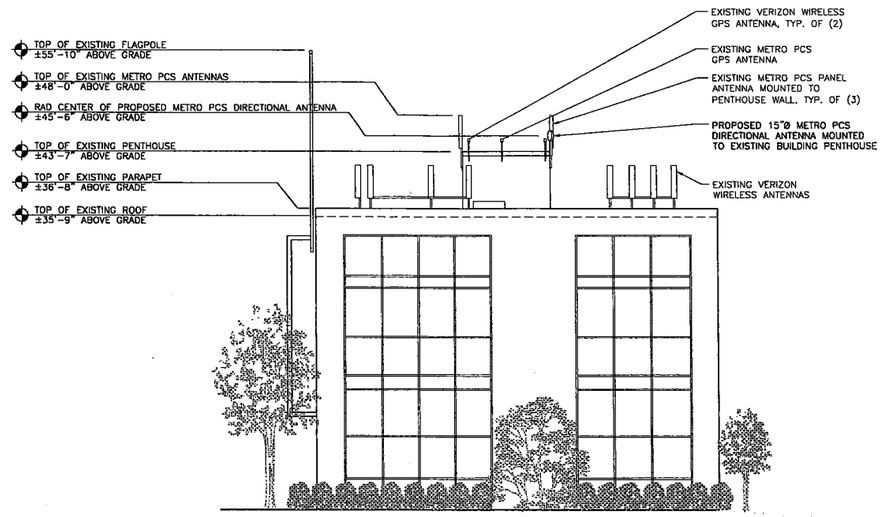

42 NORTH ELEVATION

1/8"=1'-0"

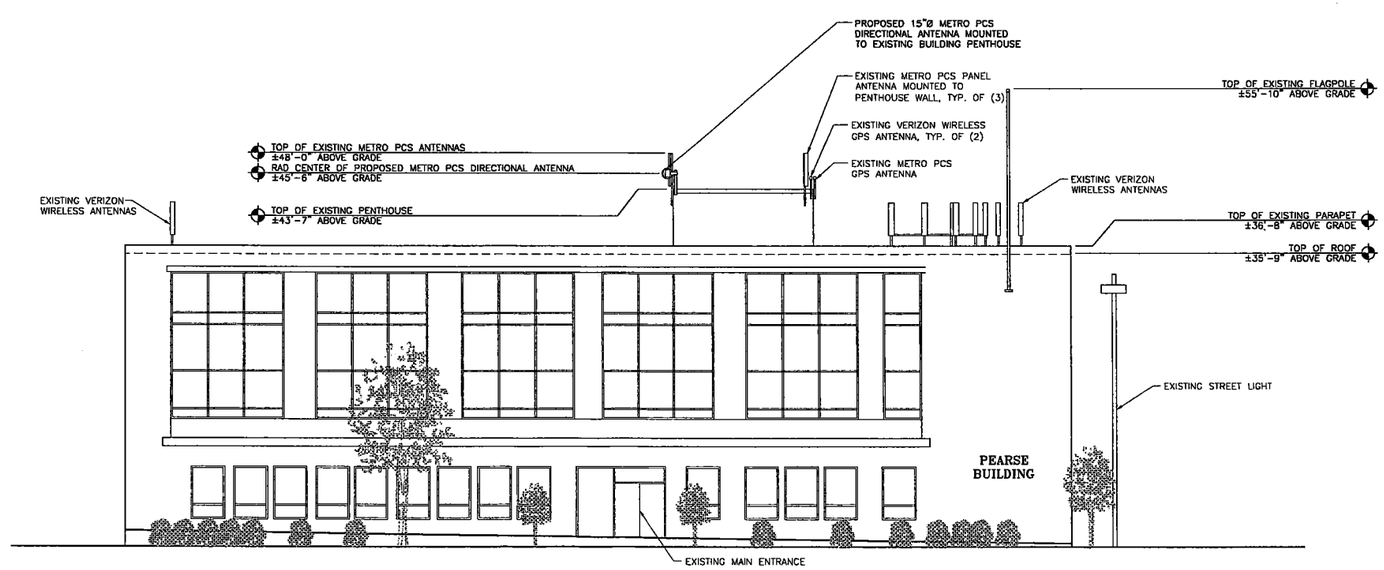

44 WEST ELEVATION

1/8"=1'-0"

metroPCS

METRO PCS, INC
1080 MARINA VILLAGE PARKWAY
4th FLOOR
ALAMEDA, CA 94501
PHONE: 510.523.2610
FAX: 510.748.1823

ARCHITECT:

omni DESIGN GROUP
Architecture
Civil Engineering
Surveying
Telecommunications

689 Tank Farm Road, Suite 140
San Luis Obispo, California 93401
Phone: (805) 544-9700
www.omnidesigngroup.com
email: omni@odgslo.com

CONSULTANT:

SEAL:

REV.:	DATE:	DESCRIPTION:	BY:

DRAWN BY:	CHK.:	APV.:
JM	SM	TR

CURRENT ISSUE DATE:

06/28/12

ISSUED FOR:

100% ZONING

PROJECT INFORMATION:

PEARSE BUILDING
SF0902
1801 MURCHISON DRIVE
BURLINGAME, CA 94010
COUNTY OF SAN MATEO
APN: 025-121-150

SHEET TITLE:

ELEVATIONS

SHEET NUMBER: REVISION:

A-3

855-225A

\\Bit\projects\Metro PCS\SF0902 (855-225A) Pearse Building\1- ZD's\4-100% ZDs Sent 06-28-12\SF0902_A-1 - A-3.dwg, 7/16/2012 4:08:27 PM, Josh Minkel, Omni Design Group, HP8150-Arch.pc3