Item No. 8b
Regular Action

PROJECT LOCATION
225 California Drive

City of Burlingame

BURLINGAME CITY HALL
501 PRIMROSE ROAD
BURLINGAME, CA 94010

Meeting Minutes
Planning Commission

Monday, September 28, 2015 **7:00 PM** **Council Chambers**

a. 225 California Drive, zoned HMU - Design Review for an application for Environmental Review, Commercial Design Review, and Special Permit for building height for a new 4-story commercial building (DLC 225 California, applicant; The Jewell Partners, property owner; MBH Architects, architect) (172 noticed) Staff Contact: Kevin Gardiner

All Commissioners had visited the property and met with the project applicant.

Contract Planner Sheldon Ah Sing provided an overview of the project, including details of project modifications that have been made since the Commission last viewed the project.

Questions of staff:

> Does the screen for the solar panels exceed 10% of the roof? (Ah Sing: the area is likely under 10%, but the way the definition is crafted it leaves it open to interpretation.)

Chair DeMartini opened the public hearing.

Ryan Guibara and Rich Dewey of Dewey Land Development provided an overview of the revisions made to the project in response to comments received at a design review study session on July 13, 2015. Project Architect Andres Grechi was also available for questions.

Commission questions/comments:

> Thanked the applicant for being responsive to comments from the last public hearing.
> Has the City's traffic engineer approved the location of the four trees along Highland Avenue? Wants to be certain that they can be installed as proposed. (Guibara: will confirm with the Engineer.)
> Clarified that the roof deck is now gone. Note that there will still be a small outdoor area on the front portion of the third floor roof.
> The parapet would not be required, though in this instance it is being provided as a means of screening for the solar panels? (Guibara: yes, this is proposed as an attractive screening feature. Grechi: want to be certain that the design is integrated.)
> Will one be able to see the solar panels on the roof from the pedestrian level? (Guibara: yes, would be able to see them from more distant locations, but not from directly at pedestrian level adjacent to the building.)
> Where do they see the retail space located? (Guibara: the lobby would be used in combination with, for example, a coffee shop. However, flexibility is built in to accommodate different tenancies.)
> Requested clarification regarding the depth of the retail space. (Guibara: measured to the middle section of the space, it is roughly 40-feet deep.)
> Have done a good job addressing the height issue and the parking issues.
> The building will be pretty visible from other parts of Downtown, but stepping it back on the fronts and sides has been helpful. Was any thought been given to stepping it back from Hatch Lane? (Guibara: doing so would impact the floor area. There is a lot of articulation provided around the rest of the building.)
> How will the gaps between the project and the adjacent buildings be designed? (Guibara: hasn't been resolved yet, but will be closed off in some manner to prevent access between buildings.)
> Has thought been given to any other material than plaster at the ground level? (Grechi: the original

thought is to install GFRC - glass fiber reinforced concrete.)
> Comment on the car share program. (Guibara: have been reviewing options and will continue discussions with staff.)
> Is there any feedback regarding how many spaces should be provided? (Guibara: will continue working with the staff to resolve whether one space or more should be required.)
> Has any thought been given to providing a bike share program? (Guibara: will be discussed with the staff.)
> Is the applicant open to having the parking available to the public after hours? (Guibara: are open to this type of arrangement, but need to determine the needs of prospective tenants. To the extent that the garage may be open to the public it is worth considering perhaps a valet service to keep the public out of the building. Must wait to identify a tenant.)
> Likes the side elevations. With respect to the light wells, is there the square footage to provide a terrace on the third floor to look over the adjacent building? (Guibara: would adversely impact the second floor if this were done.)
> With respect to the green color of the glass, noted comments from Jennifer Pfaff. (Guibara: will be clear, non-reflective glass. He further noted the flexibility to convert the Hatch Lane frontage to retail in the future if desired.)

Public comments:

> Joan Endo, Sakae Sushi: submitted her letter for the record that speaks to potential impacts to her business while this project is under construction. Concerned that she may be put out of business. Should only be a three-story building. During construction parking will be removed in front of her business and will impact her customers' ability to park and access her business. Tightly controlled conditions will avoid litigation. Her letter provides practical, considerate conditions that should be considered. Requested that the Commission consider the content of her letter. Noted that there is a no parking zone in front of her business.

> Jennifer Pfaff, 615 Bayswater Avenue: referred to her letter and comments regarding the stucco finish - referenced the corner building at the Safeway property. Hopes that the finish is of a higher quality. Thanked the architect for doing something traditional. Feels real stucco on at least the front would be preferred. Real stucco should also be provided on the Hatch Lane facade as well. Still concerned regarding the green tint of the glass. Concerned about the reference to the project at "Burlingame Station" - would prefer not to have name as it would be confusing.

> Linda Field: Thanked the applicant for responding to comments regarding the building design. Continues to find the overall size of the project objectionable. Feels that a four story is too tall. The scale of the building needs to fit with the scale of the adjacent buildings. At a minimum, the top floor should be stepped back further. Concerned regarding potential traffic impacts. Urged the Commission to closely consider the reduction in parking related to the car-sharing space.

Chair DeMartini closed the public hearing.

Commission comments:

> Asked if the comments regarding the adjacent business owner will be considered in the environmental document.
> Feels the parapet is a part of the building design and not truly a screen.
> Design is significantly improved from the prior design.
> Feels that there are other projects of a similar height in the Downtown; this could also fit. Encouraged providing a fourth floor step back from Hatch Lane as well.
> Concerned regarding traffic and other construction impacts. What can be done?
> Likes the changes that have been made to the project.
> Appreciates the design approach to minimize the apparent height of the building.
> Feels that the retail will work substantially better with the current design.
> The project does fit into the Downtown context better. Only concern is that the fourth floor looks a

bit "static" - would like to see some liveliness and freshness introduced into the Downtown. Perhaps look at a more dynamic approach for the fourth floor.

> The cornice detailing needs to be substantial and elegant.

> Would be helpful to work with the parapet design to bring it into the permitted height.

> Would be useful to see some renderings from other locations in three dimensions.

> Disappointed because he really liked the original design - thought that there may have been some design in the middle between the two extremes. The design will not offend anyone - unfortunate, would have liked to have seen the first significant office building in Burlingame to be a bit fresher.

> The parapet is not necessary as a guard rail since the roof top is not used as outdoor space. Believes that another approach to screening of the solar panels is a benefit. Do need to take into the view of rooftop equipment from various vantage points. Looks at the parapet as a roof screen.

> The Hatch Lane elevation is the back of the building - stepping the fourth floor back will not provide much of an improvement. Would it be a token effort? Can work the way it is designed.

> The applicant can attempt to resolve the glass color.

> Believes there is an opportunity to provide more substantial finishes at the street level - perhaps add something around the entry area to give a more substantial feel.

> Likes the front of the building and agrees pulling back the fourth floor from Hatch Lane.

> Would be great to see another rendering to show the sides of the building - what you would see from a distance?

> The parapet makes sense and are not offensive. Concerned about if technology changes.

> Likes the approach for the lobby/retail space.

> Has heard the comments regarding the potential impact of construction upon the businesses, but could come out as a vast improvement. Code enforcement can be used to ensure compliance with construction restrictions. Feels having the office next to a restaurant is a good fit. Something will be built on this site.

> Not certain if the public would be interested in paying for parking at night. Could the City share some of the expense? (Kane: this matter is part of a larger policy discussion that must occur outside of the discussion of this project.)

> Majority of the Commission views the parapet as a screen.

> Some members believe that there is a design approach that could provide better articulation on the fourth floor on Hatch Lane that stops short of stepping it back.

At this time, no action is required regarding this item.

City of Burlingame

BURLINGAME CITY HALL
501 PRIMROSE ROAD
BURLINGAME, CA 94010

Meeting Minutes
Planning Commission

Monday, July 13, 2015 | **7:00 PM** | **Council Chambers**

a. 225 California Drive, zoned HMU - Environmental scoping and Design Review for an application for Environmental Review, Commercial Design Review, Special Permit for building height, and Parking Variance for a new 4-story commercial building (DLC 225 California, applicant; The Jewell Partners, property owner; MBH Architects, architect) (36 noticed) Staff Contact: Kevin Gardiner

Attachments: 225 California Drive staff report

225 California Drive Attachments

225 California Drive Received After Letters

All Commissioners had visited the project site. Commissioner DeMartini met with the applicant and a business owner of 1100 Howard Ave. Commissioners Sargent, Terrones, Loftis, and Bandrapalli met with the applicant. Commissioner Gum met with the applicant and with the owner of Christie's next door.

Planning Manager Gardiner and Contract Planner Sheldon Ah Sing presented the staff report.

Commission questions:

> Further describe the Special Permit for height? (Ah Sing: The roof is at 55 feet, and the roof deck is at 55 feet, but the guard rail and parapet extend 4 feet higher. The guard rail is not solid, while the parapet around the back is solid. There is also a canopy in the front, but is designed to not exceed 10 percent of the roof area per the requirements of the Special Permit.)(Gardiner: This type of Special Permit is unique to this district and one other in the Downtown Specific Plan. The intention is to provide a means for having a limited portion of a building exceed the height limit for architectural features. Normally the parapet is required to be within the height limit, but this application proposes to include it within the Special Permit request. This is different than how things are normally done, and the commission can decide on this.)

> How does the parking puzzle stacker work, and are there local examples? (Ah Sing: Two levels with an empty slot, then would shuffle the cars around. Would need to be for people who work in the building. There are some examples in jurisdictions that are more dense.)

> Confusion on environmental information form, as it shows a different number of parking spaces than shown on the plans and staff report. (Gardiner: The form is provided by the applicant at time of application and will need to be updated. It is initially provided to give a sense of the scale of the project for purposes of determining CEQA status.)

> 5,000 to 20,000 cubic yards is indicated on the environmental form for being removed, but expect it will be more with three levels of underground parking. Will impact the traffic including trucks hauling out.

> Is underground creek within 200 feet of the site? Should be verified.

> Will there be a peer review of the studies that were submitted with the application? (Ah Sing: Yes can do that. There is an environmental consultant, and they can be directed to have peer review.)

> Is there an estimate of the numbers of people in the building? (Ah Sing: Applicant can provide an estimate.)

> Why was the Howard/California intersection not included in the traffic study? (Gardiner: Intersections included were provided from the Engineering Division. California/Howard was not included because the assumption was that traffic exiting the project would be required to turn right on Howard, not towards the California Drive intersection. As this is a scoping meeting, it can still be identified for reasons other than

the base criteria.)

> Will cumalitive impacts include the potential Peninsula Avenue interchange in San Mateo? (Ah Sing: Assumes projects that are in the pipeline would be included in the analysis.)(Kane: Projects in a pipeline are easier to analyze than projects that are in the proposal stage.)

> Is there a sense whether this will be an EIR or a Mitigated Negative Declaration? (Gardiner: Too early to tell. This is the beginning of the study process so will depend on impacts identified in the Initial Study.)

Chair DeMartini opened the public hearing.

Richard Dewey and Ryan Guibara, Dewey Land Company, and Andres Grechi, MBH Architects, represented the applicant:

> 1450 Chapin Avenue project completed last year. Same architect on this application.
> Original design concept was transparent facade, to see activity inside.
> Revised through application to mix transparency with more classical elements.
> Rich ground floor treatment.
> Articulated on sides, not flat. Light and balconies throughout.
> Roof with transparent parapet made of glass.
> Stone, GFRC (glass reinforced concrete), glass, metal, and wood materials.
> West elevation has same materials as the front, with stone ground floor. Solid parapet on back to finish the cornice.
> Vehicles enter from Highland and exit from Hatch Lane. Right-turn only at Howard.
> Three office levels, each with different balconies.
> Roof has landscaping and glass rail at front, solar panels and mechanical.

Commission questions/comments:

> A four story building could work if articulated and scaled nicely. However this is made to look like a five story building. If a person who stands 6'-10" wanted to fit in with friends, probably would not wear a top hat. Canopy and tall atrium makes building appear like it is a five-story building. Alternative would be a bottom, a base, and the fourth floor articulated with the edges and the canopy. (Grechi: Goal was not to feel taller. Once the building was massed, the elements were added for the portions. It has a base, middle and top. Building has two forms, with an element wrapping around to marry the two masses. If this element were removed and brought down, the building becomes stubby and short. Elegance and good proportions would be lost. Could set a precedent for the area for well-proportioned architecture.)
> Canopy provides some protection for roof garden.
> Wants to make sure the building fits in.
> Would like to see awnings at street level investigated further. Examples of recently approved projects at Comerica, Walgreen's, BevMo. Needs structure for pedestrian protection. (Grechi: There is an element over the front door that extends across. Light awnings over storefront in proportion to the space, which are smaller.)
> Retail spaces need to support the street, not be too adjunct to the lobby. Should be open to both the street and the office users. (Guibara: 101 2nd Street example in San Francisco has a Peet's Coffee that spills into lobby. 22 4th Street is another example with a cafe barista activating the space.)
> Why not retain existing facade? (Grechi: Existing one story building. Adding a building on top would not fit, would look like a mistake. A building of today combined with the existing facade would look like a mismatch. Instead has added elements to facade to fit in.)
>Landscapingg on roof element does not show on rendering. (Grechi: There will be more planting showing. Wants it to feel lively.)
> Specific Plan talks about Hatch Lane providing a connection in the future between Burlingame Avenue and Howard Avenue. How does this project support that? (Grechi: Goal was to maintain same treatment as front. Same richness of materials, same articulation, not diminished. Sidewalk is narrow but could improve over time. Bikes could arrive by Hatch Lane.)
> Does the applicant own property or under contract? (Dewey: Under contract, closing in about a month.)

> *Variances have usually been for layout, not number of spaces. Would in-lieu fee be paid for difference? How will parking be managed on weekends and evenings? (Guibara: Understands in-lieu fee is within Planning Commission purview. Too early to tell how parking will be managed based on how building is tenanted. 1,200 sq ft of retail on ground floor replacing 13,000 sq ft existing, so less parking impact than currently.)*

> *How is excavation issues for garage different from every other property in downtown with regards to the variance request? (Dewey: Unique property, two sides to lot and buildings to each side. Property right issue.)*

> *Has there been discussion of undergrounding power lines on Hatch Lane? (Guibara: Consulted with PG&E, says it can't be done.)*

> *How would lobby coffee shop work? (Guibara: Lobby would not feel like a lobby, would feel like a cafe.)*

> *Would cafe be open on evenings and weekends? (Guibara: Does not know, depends on who the tenant is and what they want to do.)*

> *Has there been consideration on how building would function with potential closures for the Highland Avenue flex zone and Hatch Lane for special events? Where would people park? (Guibara: Circulation was discussed with Engineering staff.)(Grechi: If closures were on Saturday there would be fewer office users. There are two entrances so there is flexibility if needed. Best for engineering was access in from Highland, out Hatch but can use Hatch for access both ways if Highland is closed.)*

> *How does this fit into the spot that it's placed, with respect to the adjacent architecture, the street on the front and the alley on the back? (Grechi: Breaking down the building into smaller pieces, both horizontally and vertically. Does not want to mimic historic buildings. All surrounding buildings are different from each other. This building respecting neighbors by being well articulated, good solid materials, being well proportioned. It is bigger than surroundings, but in 2015 that is what is being done. Needs to add more space.)*

> *Will rooftop area be used on evenings and weekends? Concern with noise with parties. (Grechi: Not proposed to be used at a specific time. Area for taking a break, write emails, etc. Not a place for parties, a place for working and meeting, similar to a courtyard.)*

> *How to signal exiting vehicles so pedestrians are warned? (Grechi: Noise devices required for any other building would be applied here. Will signal when cars are coming out. There are flat areas so cars can see street as they exit.)*

> *Any thought to alternates that do not use Hatch Lane? (Grechi: Has considered nearly every alternative. This access was preferred by staff.)*

> *Has there been consideration of alternate massing? (Grechi: Has considered many designs. Believes this is the right solution but is here for input.)*

> *Front of building has a lot going for it. Can some of those elements be carried to the back? (Grechi: Has brought a lot of the materials and articulation to the back. Back is west-facing wall exposed to sun so can't have large expanses of glass facing west.)*

> *Estimate how many people will be working in the building? (Guibara: Is guessing 100-125 at any one time.)*

> *What is longest time to wait for car to arrive at the parking puzzler? (Guibara: 60 seconds.)*

> *Will rooftop access be available for the general public? (Guibara: Depends on the tenant. There may be security concerns.)*

> *Has there been wind shielding studies? (Grechi: Windbreak element on roof, with further protection from elevator and stair towers. Prevailing winds from the west.)*

> *Where will the construction equipment be staged? (Guibara: Working on it with the contractor. Working with other property owners on potential for off-site staging.)*

Public comments:

Joan Endo, Sakae Sushi spoke on this item:

> *Longterm tenant of building next door, 243 California Drive.*

> *Concerns with size of building and impact to business during construction.*

> *Build safe - demolishing old building with asbestos, building materials and wells under property. When digging, will wells contaminate adjoining properties?*

> *Pedestrian was hit in front of building, so there are traffic concerns.*
> *Restaurant is open 7 days a week 11:30-2, 5:30-10. Concerns with vibration and drilling. Adjoining wall is 6 feet from demolition, and buildings are attached.*
> *White elephant.*
> *Concerns about Hatch access. Will have to demolish Hatch and Highland for sewer and PG&E, will take tenants' access away.*
> *Questions feasibility of the service road, it is very narrow.*
> *Will take approximately one year. The longer the delay, the greater the interruption to the business.*
> *Has submitted two letters.*

Basim Azar spoke in this item:

> *Owner of Christie's Restaurant, and an apartment on Hatch Lane. Same concerns as Ms. Endo.*
> *Concerned about losing parking spaces for entrance.*
> *Hatch Lane is an alley and is difficult to get traffic through, especially in afternoons.*
> *Building is seven stories when including three floors of parking.*

Irvin Dawid, 615 Ansel Road, spoke on this item:

> *Supportive of the building. Downtown needs more height and mix of uses.*
> *Zoning allows multifamily housing. Would like to see the type of building seen in Millbrae on the former Wendy's site, or like the apartments on California Drive and Peninsula that are four stories.*
> *Burlingame has the second-highest imbalance of jobs to housing in the region (2.52 to 1), second only to Palo Alto (3.3 to 1) according to San Jose Business Journal. Would be prime location for mixed use, should do all three uses including housing.*
> *Has a problem that City is not demanding a lot less parking be provided, it is a prime TOD zone. Should demand the developer do Transportation Demand Management (TDM) - every worker should have Caltrain Ecopasses. Lytton Gateway in Palo Alto is a good example for TDM model.*

Eric and David Mandel, 214 Lorton Avenue, spoke on this item:

> *Does not fit in to Burlingame, but would be great for downtown.*
> *Hatch Lane vision could be great someday, but once it is a thoroughfare can't go back.*
> *Should consider partnership with parking structure in Lot N. Could also benefit the city.*

Jennifer Pfaff spoke on this item:

> *Submitted a letter*
> *Lovely building but does not fit here.*
> *If approve 10-foot special permit as a typical outcome for roof structures, will be seeing more of this. Other project on Howard is trying to keep below the height limit.*
> *Is not a good fit because it does not have the refined, fined-tooth scale characteristic of Downtown.*
> *Suggestion to pull structure 12 feet away from Sakae building to provide a pedestrian access, have all traffic from Highland and keep traffic off of Hatch.*
> *If Lot N disappears there would be no way for public to access Hatch Lane.*

Linda Field spoke on this item:

> *Rendering indicates building is too tall to compliment surrounding buildings. Will stick out like a sore thumb.*
> *Existing building is not as tall as adjacent buildings currently.*
> *Roof terrace looks like a fifth floor, adding to the oversized feeling.*
> *Facade looks austere. Existing facade has architectural features that provide character.*
> *Visit Redwood City and look how the projects there are changing the character of that city, especially the building across from City Hall.*
> *Waiver here could lead to other waiver requests.*

> *25 spaces is a big variance.*
> *Don't be entranced with the current siren call of urbanization that is sweeping the Bay Area. Keep Burlingame small-town scale in tact.*

John Rule spoke on this item:

> *Conditionally in favor of the project.*
> *Applicant was guided towards current design but Is not sure the design works. Prefers original glass modern facade.*
> *Traffic is too heavy for Hatch Lane.*
> *Ecopasses a great idea, but people drive. There is not enough parking in downtown currently. Variance to reduce parking would be detrimental.*

Philip Trevenson spoke on this item:

> *Burlingame is historical and quaint.*
> *Example of Burlingame library built to mimic older building.*
> *Walgreen's tried to fit in, fits in better.*
> *San Mateo High School example.*
> *Should look like it belongs there. Could look like old theater where Fox Mall now stands.*

Applicant responses (Dewey):

> *Asbestos will be removed with appropriate protocols, similar to protocols at 1450 Chapin.*
> *Site had underground storage tanks, they have been removed. Excavation of soil will be removed from site in a process reviewed and approved by the County. Wells will be capped off per County protocols.*
> *Demolition time would be a matter of weeks, not months.*
> *Hatch Lane runs from Burlingame Avenue down to Howard. This site is three quarters down Hatch Lane from Burlingame Avenue, just passing by a couple of properties before Howard. No traffic is going up to Burlingame Avenue. City engineers directed to bring entrance from Highland, not Hatch. Intention is not to close streets during construction.*

Chair DeMartini closed the public hearing.

Commission discussion:

Environmental Review Scoping:

> *Cubic yardage of excavation and traffic pattern needs to be studied.*
> *Needs to locate underground creek.*
> *Calculation for employees for office space utilizes 2012 guidelines. Understands office space per employee is decreasing, so more employees per area. People are grouping themselves differently than before. New tenants coming into Burlingame have had employee counts higher than would have been expected.*
> *Should have a peer review of the traffic study.*
> *Look at numbers of employees in retail space. Would want more activity so more than three employees total in retail spaces.*

Design Review:

> *Variance assumes there is an inherent right to fully develop the property to a certain standard, but seems like a circular argument. Exceptional circumstance is created by need to build the parking to support building to the fullest extent possible. Needs proper support. (Kane: Downtown Specific Plan establishes maximum envelope, but does not create an entitlement to build to the envelope. Design review and environmental constraints also need to be taken into account. There may be a lower limit*

with a tipping point of reasonableness. Can provide a short memo to the Planning Commission.)

> Handsome building, proportions work for this building. Does not believe this is the only solution that can work. Looks and feels like it is five stories from the street. Wants it to fit in better with the neighborhood.

> Needs to resolve the Highland and Hatch tension. Downtown Plan suggests vibrancy for Hatch Lane but is in conflict from what applicant is being told by Engineering. (Kane: Engineering can provide further explanation.)(Gardiner: Concern is turning movements from vehicles exiting on Highland trying to turn left on California Drive. Would have restricted right turns at Howard whether it is Highland or Hatch Lane.)

> What about parking off site? Could have a parking elsewhere, possibly contribute to parking being built at south of Howard Avenue.

> Size the office to the amount of parking that can be provided, as happens with residential projects.

> Does not believe Hatch Lane is suitable for egress.

> Misses a number of policies in the Downtown Plan - fitting with architecture, mass and bulk, pedestrian access. Adding more cars to Hatch Lane would be a mistake.

> Would be a good-looking building in San Francisco but does not work in Burlingame.

> Cite some buildings in town that are this scale, height? Will allow people to have an idea of the scale.

> Does code requirement account for ITE reduction for proximity to transit? (Gardiner: No, city code does not have discount built in. ITE guideline is a reference for evaluating the variance request.)

> Should consider other options for parking, such as including in-lieu fee to contribute to a downtown garage.

> Belden Lane is a stretch for Hatch Lane. Belden Lane is a high bar. Envisions taking down power poles on Hatch Lanes, putting garbage away, then it can become something different. Should continue to evaluate with PG&E to have poles removed.

> Could incorporate historic facade.

> Concerned with suggestion that in 2015 things should be made bigger. An office building would go well here, but does not need to be so big that it doesn't fit.

> Suggestion that traffic on Hatch Lane forces people to slow down seems debatable.

> City needs to provide direction to applicant on access.

> Concerned lobby retail will be closed on weekends, or not enough draw just from office.

> Connection to retail needs to be to Hatch Lane. Lobby should open to Hatch Lane.

> More vocal opinions on this design than the more modern proposal on Howard Avenue.

> Special Permit findings for height can't be made based on consistency with surrounding buildings. Adhering to the letter of the Special Permit, but not the spirit - there is more proposed to extend beyond the height limit than just architectural features.

> This is not the only architectural solution that would fulfill the urban design demands. It ignores buildings to each side. Should draw the elevation of the block. Likes this building but does not fit in here.

> Hatch Alley concept is farfetched. More like Claude Alley, smaller than Belden Lane.

> Retail should be aggregated, driveway moved to one side, building should address street.

> Variance could be supported if study is using industry-accepted standards. If it can't be supported here next to Caltrain can't be supported anywhere. Building owner could require transit passes issued to tenants as a mitigation.

> Needs to make sure building fits into the neighborhood.

Study item. Will return for further review including environmental review.

COMMUNITY DEVELOPMENT DEPARTMENT • 501 PRIMROSE ROAD • BURLINGAME, CA 94010
p: 650.558.7250 • f: 650.696.3790 • www.burlingame.org

APPLICATION TO THE PLANNING COMMISSION

Type of application:

☐ Design Review ☐ Variance ☐ Parcel #: 029-211-080
☐ Conditional Use Permit ☐ Special Permit ☐ Zoning / Other: _____

PROJECT ADDRESS: 225 California Drive

APPLICANT

Name: DLC 225 California
Address: 999 Baker Way, Suite 300
City/State/Zip: San Mateo, CA 94404
Phone: 650-571-1010
E-mail: ryan@deweyland.com

PROPERTY OWNER

Name: Same as Applicant
Address: _____
City/State/Zip: _____
Phone: _____
E-mail: _____

ARCHITECT/DESIGNER

Name: MBH Architects
Address: 960 Atlantic Ave
City/State/Zip: Alameda, CA 94501
Phone: 510-865-8663
E-mail: andresg@mbharch.com or kenl@mbharch.com

Burlingame Business License #: 28491

RECEIVED
MAR 14 2016
CITY OF BURLINGAME
CDD-PLANNING DIV.

Authorization to Reproduce Project Plans:
I hereby grant the City of Burlingame the authority to reproduce upon request and/or post plans submitted with this application on the City's website as part of the Planning approval process and waive any claims against the City arising out of or related to such action. _____ (Initials of Architect/Designer)

PROJECT DESCRIPTION: Existing building to be demolished. Construction of a four (4) story office building with retail and parking on the ground floor, all above three levels of underground parking.

AFFIDAVIT/SIGNATURE: I hereby certify under penalty of perjury that the information given herein is true and correct to the best of my knowledge and belief.

Applicant's signature: _____ **Date:** 3/14/16

I am aware of the proposed application and hereby authorize the above applicant to submit this application to the Planning Commission.

Property owner's signature: _____ **Date:** 3/14/16

Date submitted: _____

Project Comments

Date: September 17, 2015

To:

0 Engineering Division
(650) 558-7230

X Building Division
(650) 558-7260

0 Parks Division
(650) 558-7334

0 Fire Division
(650) 558-7600

0 Stormwater Division
(650) 342-3727

0 City Attorney
(650) 558-7204

From: Planning Staff

Subject: Request for Environmental Review and Design Review for a new, four story commercial building (retail on the ground floor and three stories of office) at **225 California Drive, zoned HMU (Howard Mixed Use), APN: 029-211-080**

Staff Review: **September 21, 2015**

No further comments.

All conditions of approval as stated in all previous reviews of the project will apply to this project.

Reviewed by:_____ **Date:** 9-18-2015

Project Comments

Date: April 21, 2015

To:

0 Engineering Division
(650) 558-7230

X Building Division
(650) 558-7260

0 Parks Division
(650) 558-7334

0 Fire Division
(650) 558-7600

0 Stormwater Division
(650) 342-3727

0 City Attorney
(650) 558-7204

From: Planning Staff

Subject: Request for Environmental Review, Design Review, Special Permit and Parking Variance for a new, four story commercial building (retail on the ground floor and three stories of office) at **225 California Drive, zoned HMU (Howard Mixed Use), APN: 029-211-080**

Staff Review:

No further comments.

All conditions of approval as stated in the review dated 4-29-2015 will apply to this project.

Reviewed by: _____ **Date:** 6-4-2015

Project Comments

Date: April 21, 2015

To:

0 Engineering Division
(650) 558-7230

X Building Division
(650) 558-7260

0 Parks Division
(650) 558-7334

0 Fire Division
(650) 558-7600

0 Stormwater Division
(650) 342-3727

0 City Attorney
(650) 558-7204

From: Planning Staff

Subject: Request for Environmental Review, Design Review, Special Permit and Parking Variance for a new, four story commercial building (retail on the ground floor and three stories of office) at **225 California Drive, zoned HMU (Howard Mixed Use), APN: 029-211-080**

Staff Review: **April 27, 2015**

1) Plans submitted for any commercial project must be designed, wet-stamped, and signed by a licensed architect. 1997 Uniform Administrative Code §302.2 and §302.3.
2) On the plans specify that this project will comply with the 2013 California Building Code, 2013 California Residential Code (where applicable), 2013 California Mechanical Code, 2013 California Electrical Code, and 2013 California Plumbing Code, including all amendments as adopted in Ordinance 1889. Note: If the Planning Commission has not approved the project prior to 5:00 p.m. on December 31, 2013 then this project must comply with the 2013 California Building Codes.
3) Specify on the plans that this project will comply with the 2013 California Energy Efficiency Standards.
   Go to http://www.energy.ca.gov/title24/2013standards/ for publications and details.
4) Provide two completed copies of the attached *Mandatory Measures* with the submittal of your plans for Building Code compliance plan check. In addition, replicate this completed document on the plans. Note: On the Checklist you must provide a reference that indicates the page of the plans on which each Measure can be found.
5) Place the following information on the first page of the plans:

"Construction Hours"
Weekdays: 7:00 a.m. – 7:00 p.m.
Saturdays: 9:00 a.m. – 6:00 p.m.
Sundays and Holidays: 10:00 a.m. – 6:00 p.m.

(See City of Burlingame Municipal Code, Section 13.04.100 for details.)

Construction hours in the City Public right-of-way are limited to weekdays and non-City Holidays between 8:00 a.m. and 5:00 p.m.

Note: Construction hours for work in the public right of way must now be included on the plans.

6) On the first page of the plans specify the following: "Any hidden conditions that require work to be performed beyond the scope of the building permit issued for these plans may require further City approvals including review by the Planning Commission." The building owner, project designer, and/or contractor must submit a Revision to the City for any work not graphically illustrated on the Job Copy of the plans prior to performing the work.
7) Anyone who is doing business in the City must have a current City of Burlingame business license.
8) Provide a fully dimensioned site plan which shows the true property boundaries, the location of all structures on the property, existing driveways, and on-site parking.
9) Note: Any revisions to the plans approved by the Building Division must be submitted to, and approved by, the Building Division *prior to the implementation of any work not specifically shown on the plans*. Significant delays can occur if changes made in the field, without City approval, necessitate further review by City departments or the Planning Commission. Inspections cannot be scheduled and will not be performed for work that is not shown on the Approved plans.
10) **A Certificate of Occupancy will be issued after the project has been finaled. No occupancy of the building is to occur until a Certificate of Occupancy has been issued.**
11) Provide a complete demolition plan <u>that includes a legend</u> and indicates existing walls and features to remain, existing walls and features to be demolished, and new walls and features.

    NOTE: A condition of this project approval is that the Demolition Permit will not be issued and, and no work can begin (including the removal of <u>any</u> building components), until a Building Permit has been issued for the project. The property owner is responsible for assuring that no work is authorized or performed.
12) When you submit your plans to the Building Division for plan review provide a completed Supplemental Demolition Permit Application. **NOTE: The Demolition Permit will not be issued until a Building Permit is issued for the project.**
13) Show the distances from all exterior walls to property lines or to assumed property lines
14) Obtain a survey of the property lines.
15) Indicate on the plans that, at the time of Building Permit application, plans and engineering will be submitted for shoring as required by 2013 CBC, Chapter 31 regarding the protection of adjacent property and as required by OSHA. On the plans, indicate that the following will be addressed:

    a. The walls of the proposed basement shall be properly shored, prior to construction activity. This excavation may need temporary shoring. A competent contractor shall be

consulted for recommendations and design of shoring scheme for the excavation. The recommended design type of shoring shall be approved by the engineer of record or soils engineer prior to usage.

b. All appropriate guidelines of OSHA shall be incorporated into the shoring design by the contractor. Where space permits, temporary construction slopes may be utilized in lieu of shoring. Maximum allowable vertical cut for the subject project will be five (5) feet. Beyond that horizontal benches of 5 feet wide will be required. Temporary shores shall not exceed 1 to 1 (horizontal to vertical). In some areas due to high moisture content / water table, flatter slopes will be required which will be recommended by the soils engineer in the field.

c. If shoring is required, specify on the plans the licensed design professional that has sole responsibility to design and provide adequate shoring, bracing, formwork, etc. as required for the protection of life and property during construction of the building.

d. Shoring and bracing shall remain in place until floors, roof, and wall sheathing have been entirely constructed.

e. Shoring plans shall be wet-stamped and signed by the engineer-of-record and submitted to the city for review prior to construction. If applicable, include surcharge loads from adjacent structures that are within the zone of influence (45 degree wedge up the slope from the base of the retaining wall) and / or driveway surcharge loads.

16) Indicate on the plans that an OSHA permit will be obtained for the shoring* at the excavation in the basement per CAL / OSHA requirements. See the Cal / OSHA handbook at: http://www.ca-osha.com/pdfpubs/osha_userguide.pdf

* Construction Safety Orders : Chapter 4, Subchapter 4, Article 6 , Section 1541.1.

17) Indicate on the plans that a Grading Permit, if required, will be obtained from the Department of Public Works.

18) Provide guardrails at all landings. NOTE: All landings more than 30" in height at any point are considered in calculating the allowable lot coverage. Consult the Planning Department for details if your project entails landings more than 30" in height.

19) Provide handrails at all stairs where there are four or more risers. 2013 CBC §1009.

20) Provide lighting at all exterior landings.

21) On your plans provide a table that includes the following:
    a. Occupancy group for each area of the building
    b. Type of construction
    c. Allowable area
    d. Proposed area
    e. Allowable height
    f. Proposed height
    g. Proposed fire separation distances
    h. Exterior wall and opening protection
        i. Allowable
        ii. Proposed
    i. Indicate sprinklered or non-sprinklered

22) Complete the occupant load table below, that accounts for all floor area in the tenant space, and provide the table on the first page of the plans. See 2013 CBC §1004.4 and Table 1004.1.2.

Occupancy Group	Square Feet	Occupant Load Factor	Total Occupant Load
* Not required to be counted in the Occupant Load Calculation per CBC §202- "Floor Area Net"			
Corridors*		0	0
Stairways*		0	0
Toilet Rooms*		0	0
Mechanical Rooms*		0	0
Closets*		0	0
Total Bldg. Area			

23) Acknowledge that, when plans are submitted for building code plan check, they will include a complete underground plumbing plan including complete details for the location of all required grease traps and city-required backwater prevention devices.

24) Illustrate compliance with the minimum plumbing fixture requirements described in the 2013 California Plumbing Code, Chapter 4, Table 422.1 Minimum Plumbing Facilities and Table A - Occupant Load Factor.

25) Specify the location of an accessible bathroom in the retail space on the first floor, southeast corner of the building. Note: This retail space will not be able to use the common accessible bathrooms on the main floor because that would require an individual to exit the building and then re-enter the building, through another tenant space, in order to access those bathrooms.

26) Provide details on the plans which show that the entire site complies with all accessibility standards.

27) Specify on the plans the location of all required accessible signage. Include references to separate sheets on the plans which provide details and graphically illustrates the accessible signage requirements.

28) Specify the accessible path of travel from the public right of way, through the main entrance, to all areas of the building.

29) Specify an accessible path of travel from all required exits to the public right of way.

30) Specify the path of travel from on-site parking to all areas of the building.

31) Specify a level landing, slope, and cross slope on each side of the door at all required entrances and exits.

32) Provide complete dimensioned details for accessible bathrooms.
33) Provide complete, dimensioned details for accessible parking.
34) Provide details on the plans which show that the building elevator complies with all accessible standards. 2013 CBC §11B-407.
35) Where elevators are provided in structures that are four or more stories in height at least one elevator shall be provided for Fire Department emergency access. One elevator must accommodate a stretcher that is 24" x 84". See 2013 CBC §3002.4 for elevator cab dimensions (80" x 54") and other details.
36) Please Note: Architects are advised to specify construction dimensions for accessible features that are below the maximum and above the minimum dimension required as construction tolerances generally do not apply to accessible features. See the *California Access Compliance Manual – Interpretive Regulation 11B-8.*
37) Remove all references to "Handicap", "Handicapped", or "HC" and replace with the terms "Accessible", "ACC", or "D.A."
38) Provide an exit plan showing the paths of travel
39) Specify on the plans that the second exit from each floor is at least 1/3 the diagonal distance from the other exit on that floor. This distance is measure between the two exit doors or exit access doorways. (2013 CBC §1015.2.1 Ex. #2)
40) Specify the total number of parking spaces on site.
41) The accessible parking must comply with the accessibility requirements of the 2013 CBC. Specifically:
    a. All entrances to and vertical clearances within the parking structure must have a minimum vertical clearance of 8' 2" where required for accessibility to accessible parking spaces.
    b. Because accessible parking is proposed on Parking Level G1 the clear height to the lowest suspended fixture must be ≥ 8'2". Provide a detail on the plans which shows that compliance with this requirement will be achieved.
42) All NEW non-residential buildings must comply with the requirements of AB-2176 Sec. 42911 (c) [2003 – 2004 Montanez] as follows:
    a. Space for recycling must be a part of the project design in new buildings.
    b. A building permit will not be issued unless details are shown on the project plans incorporating adequate storage for collecting and loading recycled materials.
43) Sewer connection fees must be paid prior to issuing the building permit.

NOTE: A written response to the items noted here and plans that specifically address items 1, 2, 3, 5, 6, 15, 16, 17, 21, 22, 23, 24, 25, 26, 28, 29, 30, 31, 32, 33, 34, 35, 37, 38, 41 b., and 42 must be re-submitted before this project can move forward for Planning Commission action. <u>The written response must include clear direction regarding where the requested information can be found on the plans.</u>

Reviewed by: _____ **Date:** 4-29-2015

2013 CALIFORNIA GREEN BUILDING CODE CHECKLIST FOR NEW NONRESIDENTIAL BUILDINGS

Building Permit Number: _____

Site Address: _____

In the column labeled "Plan Reference" specify where each Measure can be found on the plans.

Green Building Measure	Plan Reference
SITE DEVELOPMENT (2013 CGC §5.106)	
Storm Water. Newly constructed projects which disturb less than one acre of land shall prevent the pollution of storm water runoff from the construction activities through local ordinance per 2013 CGC §5.106.1.1	
BMP. Include a plan for Best Management Practices (BMP) on the plans. 2013 CGC §5.106.1.2	
Short-Term Bicycle Parking. If the project is anticipated to generate visitor traffic, provide permanently anchored bicycle racks within 200 feet of the visitors' entrance, readily visible to passers-by, for 5 percent of new visitor motorized vehicle parking being added, with a minimum of one two-bike capacity rack. 2013 CGC §5.106.4.1.1.	
Long-Term Bicycle Parking. For buildings with more than 10 tenant-occupants, provide secure bicycle parking for 5 percent of tenant-occupied motorized vehicle parking being added, with a minimum of one space. 2013 CGC §5.106.4.1.2.	
Designated Parking. Provide designated parking for any combination of low-emitting, fuel-efficient, and carpool/van pool vehicles as shown in 2013 CGC Table 5.106.5.2. Parking stall marking shall comply with 2013 CGC §5.106.5.2.1	
Light Pollution Reduction: Outdoor lighting systems shall be designed and installed to comply with requirements in the 2013 California Energy Code and in compliance with 2013 CGC §5.106.8.	
ENERGY EFFICIENCY (2013 CGC §5.2 and the 2013 California Building Energy Efficiency Standards)	
2013 Energy Code performance compliance documentation must be provided in 8-1/2" X 11" format and must be replicated on the plans.	
The building shall be in compliance with the Mandatory requirements of the 2013 California Energy Code §100.0 through §100.10 that are applicable to the building project.	
The building shall be in compliance with the Mandatory requirements of the 2013 California Energy Code §120.0 through §130.5.	
The building shall be in compliance with the performance compliance approach (energy budgets) in the 2013 California Energy Code §140.1, or the prescriptive compliance approach in §140.2 for the Climate Zone in which the building will be located.	

Green Building Measure	Plan Reference
WATER EFFICIENCY AND CONSERVATION (2013 CGC §5.303)	
Meters. Separate sub-meters or metering devices shall be installed for the uses described in 2013 CGC §503.1.1 and §503.1.2. Buildings in excess of 50,000 square feet: Separate sub-meters shall be installed as follows: 1. For each individual leased, rented, or other tenant space within the building projected to consume more than 100 gal/day, including but not limited to, spaces used for laundry or cleaner, restaurant for food service, medical or dental office, laboratory or beauty salon or barber shop. 2. Where separate sub-meters for individual building tenants are infeasible, for water supplied to the following subsystem: a. Makeup water for cooling towers where flow through is greater than 500 GPM. b. Makeup water for evaporative coolers greater than 6 GPM. c. Steam and hot-water boilers with energy input more than 500,000 Btu/h.	
Excess Consumption. A separate sub-meter or metering device shall be provided for any tenant within a building that is projected to consume more than 1,000 gallons/day. 2013 CGC §5.303.1.2	
Water Reduction. Plumbing fixtures shall meet the maximum flow rate value shown in 2013 CGC Table 5.303.2.3. **Exception:** Buildings that demonstrate 20% overall water use reduction. In this case, a calculation demonstrating a 20% reduction in the building "water use baseline," as established in 2013 CGC Table 5.303.2.2, shall be provided.	
Water Conserving Plumbing Fixtures and Fittings. Plumbing fixtures (water closets and urinals) and fittings (faucets and showerheads) shall comply with the following prescriptive reduced flow rates: **Water Closets:** The effective flush volume of all water closets shall not exceed 1.8 gallons per flush. Note: The effective flush volume of dual flush toilets is defined as the composite, average flush volume of two reduced flushes and one full flush. 2013 CGC §5.303.3.1 **Urinals:** The effective flush volume of urinals shall not exceed 0.5 gallons per flush. 2013 CGC §5.303.3.2 **Single Showerhead:** Showerheads shall have a maximum flow rate of not more than o2.0 gallons per minute at 80 psi. 2013 CGC §5.303.3.3.1 **Multiple Showerheads Serving One Shower:** When a shower is served by more than one showerhead, the combined flow rate of all showerheads and/or other shower outlets controlled by a single valve shall not exceed 2.0 gallons per minute at 80 psi, or the show shall be designed to allow only one shower outlet to be in operation at a time. Note: A hand-held shower is considered a showerhead. 2013 CGC §5.303.3.3.2	
Wastewater Reduction. Each building shall reduce the generation of wastewater by one of the methods per 2013 CGC §5.303.4:	
OUTDOOR WATER USE (2013 CGC §5.304)	
Water Budget. A water budget shall be developed for landscape irrigation use per 2013 CGC §5.304.1.	

Green Building Measure	Plan Reference
Outdoor Potable Water Use. For new water service for landscaped areas between 1,000 square feet and 5,000 square feet, separate sub-meters or metering devices shall be installed for indoor and outdoor potable water use. 2013 CGC §5.304.2.	
Irrigation Design. In new non-residential projects with cumulative landscaped area s between 1,000 and 2,500 square feet (the level at which the MWELO applies) install irrigation controllers and sensors which include the following criteria and meet manufacturer's recommendations. 2013 CGC §5.304.3	
Irrigation Controllers. Automatic irrigation system controllers installed at the time of final inspection. 2013 CGC §5.304.3.1	
WEATHER RESITANCE AND MOISTURE MANAGEMENT (2013 CGC §5.407)	
Weather protection. Provide a weather-resistant exterior wall and foundation envelope as required by 2013 *California Building* §1403.2 and 2013 California Energy Code §150, the manufacturer's installation instructions, or local ordinance, whichever is more stringent. 2013 CGC §5.407.1	
Moisture Control. Employ moisture control measures by the following methods; **Sprinklers.** Prevent irrigation spray on structures per 2013 CGC §5.407.2.1. **Entries and openings.** Design exterior entries and openings to prevent water intrusion into buildings. 2013 CGC §5.407.2.2.	
CONSTRUCTION WASTE REDUCTION, DISPOSAL, AND RECYCLING (2013 CGC §5.408)	
Construction Waste Diversion. A minimum of 60% of the non-hazardous construction and demolition waste generated at the site will be diverted to an offsite recycle, diversion, or salvage facility. City of Burlingame Ordinance # 1704	
BUILDING MAINTENANCE AND OPERATION (2013 CGC §5.410)	
Recycling by Occupants. Provide readily accessible areas that serve the entire building and are identified for the depositing, storage, and collection of nonhazardous materials for recycling including paper, corrugated cardboard, glass, plastics, and metals. 2013 CGC §5.410.1	
Commissioning. For new buildings 10,000 square feet and over, building commissioning for all building systems covered by the 2013 California Energy Code, Part 6, process systems, and renewable energy systems shall be included in the design and construction processes of the building project. Commissioning requirements shall include items listed in 2013 CGC §5.410.2. **Commissioning Report.** A report of commissioning process activities undertaken through the design and construction phases of the building project shall be completed and provided to the owner or representative. 2013 CGC §5.410.2.6 **Testing and Adjusting.** Testing and adjusting of systems shall be required for buildings less than 10,000 square feet. 2013 CGC §5.410.4. **Operation and Maintenance Manual.** Provide the building owner with detailed operating and maintenance instructions and copies of guaranties/warranties for each system prior to final inspection. A copy of all inspection verifications and reports required by the enforcing agency must be included in this manual. 2013 California Building Code §5.410.4.5.	
FIREPLACES (2013 CGC §5.503)	
Install only a direct-vent sealed-combustion gas or sealed wood-burning fireplace or a sealed woodstove or a pellet stove, and refer to residential requirements in the 2013 California Energy Code, Title 24, Part 6, Subchapter 7, § 150.	

Green Building Measure	Plan Reference
Woodstoves. Woodstoves and pellet stoves shall comply with US EPA Phase II emission limits.	
POLLUTANT CONTROL (2013 CGC §5.504)	
Temporary Ventilation. The permanent HVAC system shall only be used during construction if necessary to condition the building within the required temperature range for material and equipment installation. If the HVAC system is used during construction, use return air filters with a MERV of 8, based on ASHRAE 52.2-1999, or an average efficiency of 30% based on ASHRAE 52.1-1992. Replace all filters immediately prior to occupancy. 2013 CGC §5.504.1.3	
Covering of Duct Openings and Protection of Mechanical Equipment During Construction. At the time of rough installation or during storage on the construction site and until final startup of the heating, cooling and ventilating equipment, all duct and other related air distribution component openings shall be covered with tape, plastic, sheet metal or other methods acceptable to the enforcing agency to reduce the amount of dust or debris which may collect in the system. 2013 CGC §5.504.3.	
Finish Material Pollutant Control. Finish materials shall comply with 2013 CGC §5.504.4.1 through §5.504.4.4. **Adhesives, sealants and caulks.** Adhesives, sealants and caulks used on the project shall meet the requirements of the standards listed in 2013 CGC §5.504.4.1.	
Paints and Coatings. Architectural paints and coatings shall comply with 2013 CGC Table 5.504.4.3 unless more stringent local limits apply. **Verification.** Verification of compliance with this section shall be provided at the request of the enforcing agency.	
Carpet Systems. All carpet installed in the building interior shall meet the testing and product requirements of one of the standards listed in 2013 CGC §5.504.4.4.	
Composite Wood Products. Hardwood plywood, particleboard and medium density fiberboard composite wood products used on the interior or exterior of the building shall meet the requirements for formaldehyde as specified in 2013 CGC Table 5.504.4.5	
Resilient Flooring Systems. 80 percent of the floor area receiving resilient flooring shall comply with at least one of the pollutant control measures listed in 2013 CGC §5.504.4.6. **Verification of Compliance.** Documentation shall be provided verifying that resilient flooring materials meet the pollutant emission limits. 2013 CGC §5.504.4.6.1	
Filters. In mechanically ventilated buildings, provide regularly occupied areas of the building with air filtration media for outside and return air prior to occupancy that provides at least a MERV of 8. MERV 8 filters shall be installed after any flushed-out or testing and prior to occupancy, and recommendations for maintenance with filters of the same value shall be included in the operation and maintenance manual. 2013 CGC §5.504.5.3	
INDOOR MOISTURE CONTROL (2013 CGC §5.505)	
Buildings shall meet or exceed the provisions of the 2013 California Building Code, Chapter 12 (Ventilation) and Chapter 14 (Exterior Walls) for indoor moisture control. 2013 CGC §5.505	
INDOOR AIR QUALITY (2013 CGC §5.506)	
Buildings must meet the minimum requirements of the 2013 California Building Code, Chapter 12 (Ventilation) for mechanically or naturally ventilated spaces. 2013 CGC §5.506.1	
For Buildings equipped with demand control ventilation, CO2 sensors and vent. Controls shall be specified and installed in accordance with the 2013 California Energy Code. 2013 CGC 5.506.2	

Green Building Measure	Plan Reference
ENVIRONMENTAL COMFORT (2013 CGC §5.507)	
Acoustical Control. Employ building assemblies and components with STC values determined in accordance with ASTM E90 and ASTM E413 or OITC determined in accordance with ASTM E 1332, using either the prescriptive or performance method in 2013 CGC §5.507.4.1 or §5.507.4.2.	
OUTDOOR AIR QUALITY (2013 CGC §5.508)	
Ozone Depletion and Greenhouse Gas Reductions. Installation of HVAC, refrigeration and fire suppression equipment shall comply with 2013 CGC §5.508.1.1 or §5.508.1.2. **Supermarket Refrigerant Leak Reduction.** New commercial refrigeration systems shall comply with 2013 CGC §5.508.2 when installed in retail food stores with 8,000 square feet or more of condition area, and that utilize either refrigerated display cases, or walk-in coolers, or freezers connected to remote compressor units or condensing units. The leak reduction measures apply to refrigeration systems containing high-global-warming potential (high- GWP) refrigerant with a GWP of 150 or greater. 2013 CGC §5.508.2	

Responsible Designer's Declaration Statement	Contractor Declaration Statement
I hereby certify that this project has been designed to meet the requirements of the 2013 Green Building Code.	I hereby certify, as the builder or installer, under permit listed herein, that this project will be constructed to meet the requirements of the 2013 Green Building Code.
Name:	Name:
Address:	Address:
City/State/Zip Code	City/State/Zip Code
Signature:	Signature:
Date:	Date:

BLDG

CITY OF BURLINGAME **BUILDING DIVISION**

RECEIVED

APR 20 2015

CITY OF BURLINGAME
CDD-PLANNING DIV.

501 PRIMROSE ROAD BURLINGAME CA 94010-3997
(650) 558-7260 FAX: (650) 696-7208
WEB SITE: www.burlingame.org

Request for Alternate Materials or Methods of Construction

Date Received: _____ Permit Number _____

In accordance with section 104.11 of the 2013 California Building Code and / or section 104.9 of the 2013 California Fire Code the undersigned requests approval of alternate materials and methods of construction for:

Project Name: 225 California Drive

Project Address: 225 California Drive, Bulringame, CA

Subject of *alternative (separate forms must be completed for each different item)*: Access to rear of proposed building

Code requirement *(specify code edition and section)*: Must have fire truck access within 140' of rear of building

Alternate proposed: See attached Memo

Justification *(attach copies of any reference, test reports, expert opinions, etc.)*: As a result of meetings with Fire department, the attached memo outlines the increased fire protection at the building in order to offset rear access.

Requested by: DLC 225 California

Affiliation with Project: Ryan Guibara
Print Name

Signature

Contact Telephone No: 650-430-5900

Staff Use Only

Staff Findings:

Approval Recommended [ ] Not Recommended [ ]

Plans Examiner: _____

Approval Recommended [ ] Not Recommended [ ]

Building Official: _____

Date: February 26, 2015

Address: 225 California Drive
Burlingame, CA 94010

Re: Extraordinary Fire Protection Measures Required

- Both Stairwells will go all the way to the roof
- Both standpipes will also go to the roof
- Both stairwells will be exhausted
- Sprinkler System will have shut off at every floor
- Fire alarm will be zoned by floor – addressable system (multiplex)
- In the garage, quick response sprinklers
- Also, already in the code, radio repeaters in the building

Project Comments

Date: January 21, 2016

To:

X Engineering Division
(650) 558-7230

0 Building Division
(650) 558-7260

0 Parks Division
(650) 558-7334

0 Fire Division
(650) 558-7600

0 Stormwater Division
(650) 342-3727

0 City Attorney
(650) 558-7204

From: Planning Staff

Subject: Request for Environmental Review and Design Review for a new, four story commercial building (retail on the ground floor and three stories of office) at **225 California Drive, zoned HMU (Howard Mixed Use), APN: 029-211-080**

Staff Review: **February 8, 2015**

1. A special encroachment permit will be required for the agreement that will allow for the use of construction tie-backs and shoring wall to remain in the City's ROW after construction. The fee will be based on a unit basis for each construction tie-back and the area of shoring wall that is within the City's ROW.
2. A stormwater maintenance agreement will have to be approved and recorded prior to the final sign-off of the construction building permit.

Reviewed by: M. Quan **Date: 2/12/16**

Project Comments

Date: September 17, 2015

To:

X Engineering Division
(650) 558-7230

0 Building Division
(650) 558-7260

0 Parks Division
(650) 558-7334

0 Fire Division
(650) 558-7600

0 Stormwater Division
(650) 342-3727

0 City Attorney
(650) 558-7204

From: Planning Staff

Subject: Request for Environmental Review and Design Review for a new, four story commercial building (retail on the ground floor and three stories of office) at **225 California Drive, zoned HMU (Howard Mixed Use), APN: 029-211-080**

Staff Review: **September 21, 2015**

1. On the site plan, please extend the view to include the small island divider on Highland and California Avenue. As part of the condition of approval for the project, improvements to extend the island will be necessary to prevent exiting vehicles from attempting to maneuver onto California Avenue.
2. On the site plan, show the replacement of the curb and gutter on Highland Avenue.
3. Replace the corner parking marking nearest the proposed driveway with a closed parking marker and show red curbing on both sides of the driveway.
4. Placement of street trees will no obstruct vehicles from entering or existing the building. There is adequate site distance for the vehicle to pull out onto Highland Avenue.
5. Please show the location of where the stormfilter will be placed in the building.

Reviewed by: M. Quan/ A. Wong **Date: 10/16/15**

Project Comments

Date: June 4, 2015

To:

X Engineering Division *(650) 558-7230*

0 Fire Division *(650) 558-7600*

0 Building Division *(650) 558-7260*

0 Stormwater Division *(650) 342-3727*

0 Parks Division *(650) 558-7334*

0 City Attorney *(650) 558-7204*

From: Planning Staff

Subject: Request for Environmental Review, Design Review, Special Permit and Parking Variance for a new, four story commercial building (retail on the ground floor and three stories of office) at **225 California Drive, zoned HMU (Howard Mixed Use), APN: 029-211-080**

Staff Review: **June 8, 2015**

1. The project proposes to connect all storm water to Hatch Lane. Please show the current drainage pattern for the existing site and where flows are directed to now.
2. The project proposes to use a contech stormfilter vault to treat 100% of the runoff. What sizing criterion was used and what size vault will be specified?
3. The project proposes to have three underground levels for parking. Please be aware that all shoring for construction of the building must be maintained within the property lines. No construction tiebacks are allowed in the public right-of-way.
4. Please number each parking space as there are stalls that do not have adequate turning radius to pull in or back out. The 24' backup space is required for all parking stalls. There are columns along a row of parking spaces that provide less than 24' backup space.
5. Please correct the lane configuration in the traffic study for northbound California at Burlingame Ave as it is a two-through lanes, and a left-turn lane.
6. There will be a queuing impact on Hatch Lane. Show a right-turn only restriction sign onto Howard Avenue.
7. Based on the traffic study, Howard/Lorton will need to be reviewed to determine the need for a traffic signal due to traffic exiting onto Howard.
8. How were the trip generations for the existing uses obtained? And when?
9. 34% Pass-by reduction seems high as the majority of the building will be office.
10. There should be no reduction in off-street parking demands for a new project in the Downtown.

Reviewed by: M. Quan **Date: 7/2/15**

Project Comments

Date: April 21, 2015

To:

X Engineering Division
(650) 558-7230

0 Building Division
(650) 558-7260

0 Parks Division
(650) 558-7334

0 Fire Division
(650) 558-7600

0 Stormwater Division
(650) 342-3727

0 City Attorney
(650) 558-7204

From: Planning Staff

Subject: Request for Environmental Review, Design Review, Special Permit and Parking Variance for a new, four story commercial building (retail on the ground floor and three stories of office) at **225 California Drive, zoned HMU (Howard Mixed Use), APN: 029-211-080**

Staff Review: **April 27, 2015**

1. Please dimension the garbage/recycling room. Please provide us a letter from Recology that acknowledges that they can service this building, based on location and size of the garbage/recycling room.
2. For both exit driveways, are security gates proposed? If so, either have the security gates flush to the property line or recess them to provide line of sight for drivers existing. An audible warning system shall be installed. Are both exists at grade level to the sidewalk?
3. What are the stormwater treatment measures for this site?
4. Is the parking lift system intended for private or public use?
5. Please show the proposed locations for all utility connections.
6. Confirm loss of one on-street parking space adjacent to driveway.
7. Please show that the vehicle path transition from the entrance driveway on Highland to the entrance of the "down" ramp.
8. Confirm that the sub eleven-foot wide ramp width allows for adequate vehicle maneuverability, especially while exiting the ramps.

Reviewed by: M. Quan **Date: 4/23/15**

Project Comments

Date: September 17, 2015

To:

0 Engineering Division
(650) 558-7230

0 Building Division
(650) 558-7260

X Parks Division
(650) 558-7334

0 Fire Division
(650) 558-7600

0 Stormwater Division
(650) 342-3727

0 City Attorney
(650) 558-7204

From: Planning Staff

Subject: Request for Environmental Review, Design Review, Special Permit and Parking Variance for a new, four story commercial building (retail on the ground floor and three stories of office) at **225 California Drive, zoned HMU (Howard Mixed Use), APN: 029-211-080**

Staff Review: **February 8, 2016**

1. Water Conservation In Landscape Ordinance checklist submitted and approved/
2. Separate Irrigation Plan required with Building permits.

Reviewed by: BD **Date: 2/6/16**

Project Comments

Date: September 17, 2015

To:

0 Engineering Division
(650) 558-7230

0 Building Division
(650) 558-7260

X Parks Division
(650) 558-7334

0 Fire Division
(650) 558-7600

0 Stormwater Division
(650) 342-3727

0 City Attorney
(650) 558-7204

From: Planning Staff

Subject: Request for Environmental Review, Design Review, Special Permit and Parking Variance for a new, four story commercial building (retail on the ground floor and three stories of office) at **225 California Drive, zoned HMU (Howard Mixed Use), APN: 029-211-080**

Staff Review: **Septmeber 21, 2015**

1. Water Conservation In Landscape Ordinance checklist required.
2. Separate Irrigation Plan required.

Reviewed by: BD **Date: 9/30/15**

Project Comments

Date: April 21, 2015

To:

0 Engineering Division
(650) 558-7230

0 Building Division
(650) 558-7260

X Parks Division
(650) 558-7334

0 Fire Division
(650) 558-7600

0 Stormwater Division
(650) 342-3727

0 City Attorney
(650) 558-7204

From: Planning Staff

Subject: Request for Environmental Review, Design Review, Special Permit and Parking Variance for a new, four story commercial building (retail on the ground floor and three stories of office) at **225 California Drive, zoned HMU (Howard Mixed Use), APN: 029-211-080**

Staff Review: **April 27, 2015**

1. Landscape plan is required to meet 'Water Conservation in Landscape Regulations" (attached). Irrigation Plan required for Building permit. Audit due for Final.
2. Street trees shall be 24" Quercus coccinea.
3. Provide staking and irrigation to street trees as per detail (attached)
4. Use City standard tree grate (attached)

Reviewed by: BD **Date: 5/8/15**

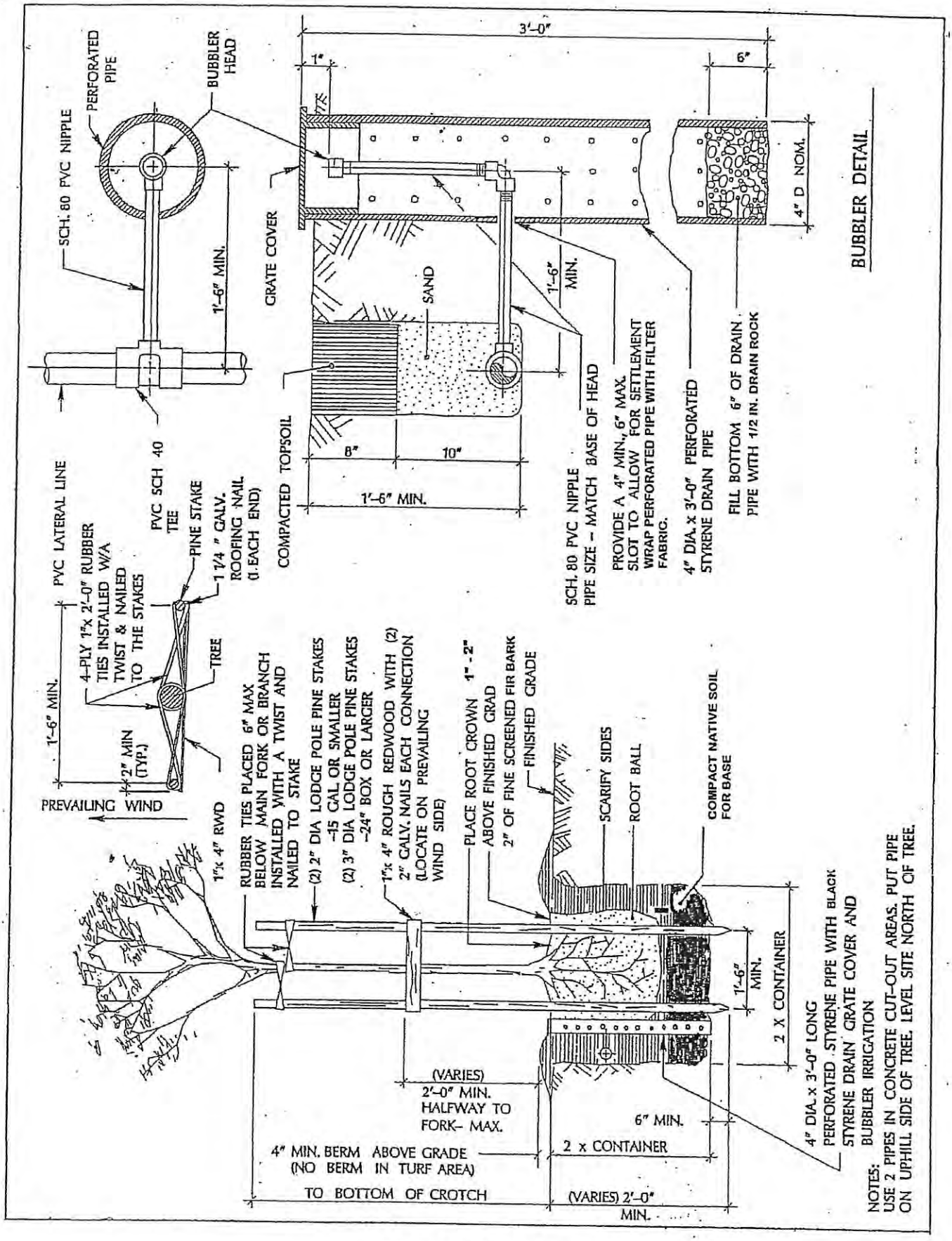

TREE PLANTING WITH BUBBLER IRRIGATION

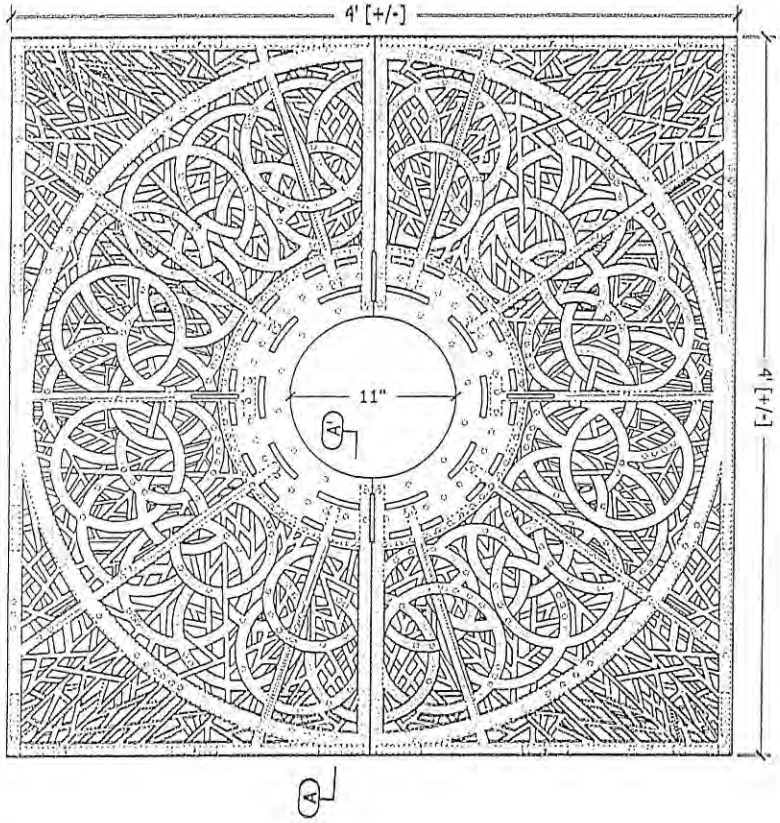

Plan

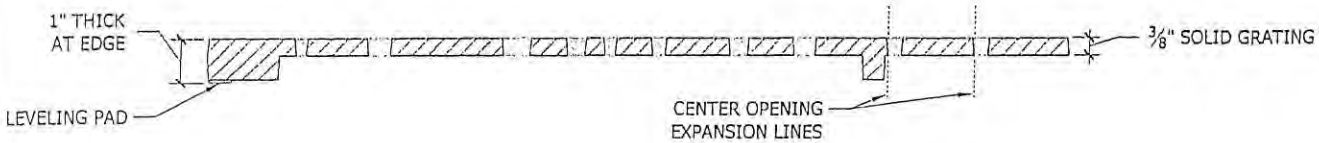

Section A-A'

SPECIFICATIONS

- Material will be high quality 100% recycled grey iron; ASTM A48 class 35b or better; hardness 170-223 brinnell (unless specified otherwise; see below).

Material:

- ☐ Grey Iron ASTM A48 (standard)
- ☐ Aluminum, ASTM B26
- ☐ Ductile Iron, (required for all load ratings higher than pedestrian) ASTM A536 class 65-45-12.
- ☐ Nickel bronze (ASTM B30)
- ☐ Bronze (ASTM B26)

- Finish will be natural patina of raw iron (unless specified otherwise; see below).

Finish:

- ☐ Raw (standard)
- ☐ Rust conditioner
- ☐ Polyester Powder Coat*
- ☐ Liquid Coat (wet paint)*

Color:

*Please specify standard UA color or mfr. name and color code.

- ☐ Brush (bronze/nickel/aluminum only)
- ☐ Polish (bronze/nickel/aluminum only)
- ☐ Galvanized (grey iron and ductile iron only)
- ☐ Other:

- **Dimensions are nominal.**

Notes

1) Cast in two pieces.
2) Grate is 1" thick at edge.
3) Center opening expansions at 1'-3" and 1'-7".
4) No openings greater than ½", in conformance with ADA Accessibility Guidelines.
5) Grate weighs 256 lbs.

Comments:

POWDER COAT DARK GREEN RAL 6009 INCLUDING FRAME

Tree Grate

4' Sq. OT-T24

Page 1 of 1 Date: 5/30/12

URBAN ACCESSORIES
Founded 1972

465 E. FIFTEENTH ST. sales@urbanaccessories.com
TACOMA, WA 98421 www.urbanaccessories.com
(877) 487-0468

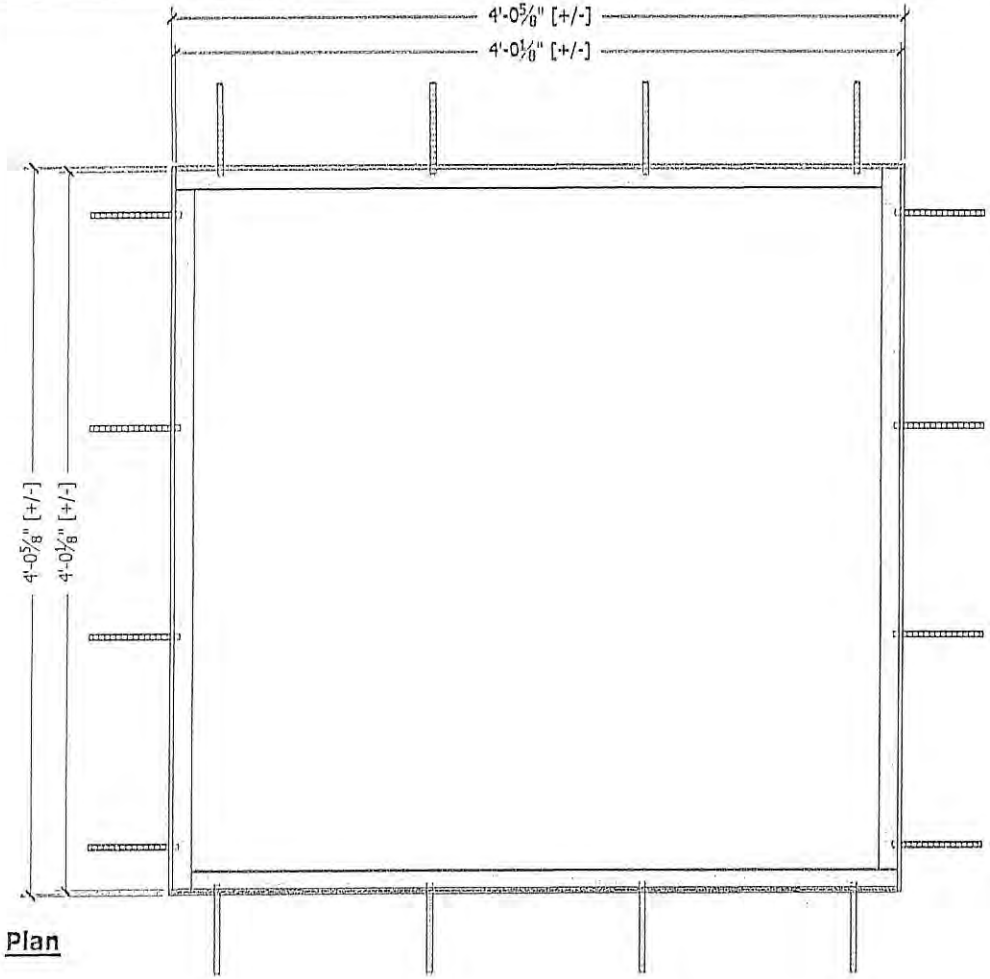

Plan

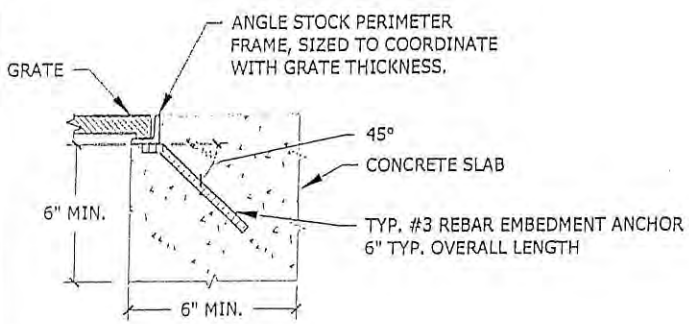

Elevation

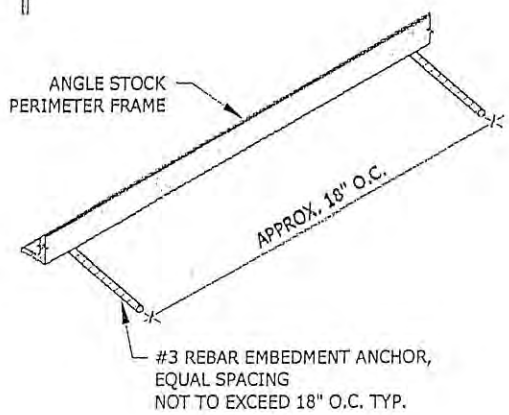

Isometric

SPECIFICATIONS

- Frames are constructed of mild steel ASTM A36 (unless specified otherwise; see below).

  Material:
  - ☐ Mild Steel ASTM A36 (standard)
  - ☐ Stainless Steel grade 304L
  - ☐ Architectural Bronze, ASTM B455
  - ☐ Structural Aluminum, ASTM B221

- Finish will be natural patina of raw steel (unless specified otherwise; see below).

  Finish:
  - ☐ Raw (standard)
  - ☐ Polyester Powder Coat*
  - ☐ Liquid Coat (wet paint)*

    Color:

    *Please specify standard UA color or mfr. name and color code.
  - ☐ Galvanized
  - ☐ Other:

- Frame is load rated for pedestrian traffic only (unless specified otherwise; see below).

  Load Classifications:
  - ☐ Pedestrian (standard)
  - ☐ Light Vehicular
  - ☐ H20/HS20

    (Additional steel support may be added for optional load classes. Please contact UA for revised cut sheet, as necessary.)

- Typical 1/8" horizontal gap between grate and frame. All visible welds to be ground smooth on outside edges. Frames will be true to square or diameter. Top of grate flush with grade of surrounding topping material (paver, concrete slab, etc.).

- **Dimensions are nominal.**

Comments:

Tree Grate Frame

4' Sq. Type "S" Pedestrian Duty

Page: 1 of 1 Date: 4/16/12

URBAN ACCESSORIES
Founded 1972

465 E. FIFTEENTH ST. sales@urbanaccessories.com
TACOMA, WA 98421 www.urbanaccessories.com
(877) 487-0488

City of Burlingame - Parks Division.

850 Burlingame Ave., Burlingame, CA 94010
phone: (650) 558-7334 • fax: (650) 343-8429

WATER CONSERVATION IN LANDSCAPE ORDINANCE

18.17.060 **Landscape Project Application**

A. The elements of a landscape must be designed to achieve water efficiency and will comply with the criteria described in the attached Ordinance. In completing the Landscape Project Application, project applicants may choose one of two options below to demonstrate that the landscape meets the Ordinance's water efficiency goals. Regardless of which option is selected, the applicant must complete and comply with all other elements of the Ordinance. The options include:

1. Planting Restrictions option:

    a. The turf area may not be more than 25% of the landscape area.
    b. At least 80% of the plants in non-turf landscape areas shall be native plants, low water using plants, or no-water using plants.

2. Water Budget Calculations option. (Section 18.70.080)

B. The Landscape Project Application shall include the following elements:

1. Project Information
2. Outdoor Water Use Efficiency Checklist (attached)
3. Water Budget Calculations. (if applicant chooses #2 above)
4. Landscape and Irrigation System Design Plans. (Section 18.17.090)
5. Landscape Audit Report. (attached)

OUTDOOR WATER USE EFFICIENCY CHECKLIST

To Be Completed by Applicant

I certify that the subject project meets the specified requirements of the Water Conservation in Landscaping Ordinance.

Signature _____ Date _____

Project Information

☐ Single Family ☐ Multi-Family ☐ Commercial ☐ Institutional ☐ Irrigation only ☐ Industrial ☐ Other:

Applicant Name (print): Contact Phone #:

Project Site Address:

Project Area (sq.ft. or acre): # of Units: # of Meters:

For a single-family project, or a single-family development project, enter this information on an average, per unit basis. For all other projects, input an aggregate value for the entire project.			Agency Review (Pass)	Agency Review (Fail)
	Total Landscape Area (sq.ft.):	☐ Tier 1 (1,000 - 2,500 sq.ft.) ☐ Tier 2 (> 2,500 sq.ft.)	☐	☐
	Turf Irrigated Area (sq.ft.):		☐	☐
	Non-Turf Irrigated Area (sq.ft.):		☐	☐
	Special Landscape Area (SLA) (sq.ft.):		☐	☐
	Water Feature Surface Area (sq.ft.):			
Landscape Parameter	**Requirements**	**Project Compliance**		
Turf	Less than 25% of the landscape area is turf	☐ Yes ☐ No, See Water Budget	☐	☐
	All turf areas are > 8 feet wide	☐ Yes	☐	☐
	All turf is planted on slopes < 25%	☐ Yes	☐	☐
Non-Turf	At least 80% of non-turf area is native or low water use plants	☐ Yes ☐ No, See Water Budget	☐	☐
Hydrozones	Plants are grouped by Hydrozones	☐ Yes	☐	☐
Mulch	At least 2-inches of mulch on exposed soil surfaces	☐ Yes	☐	☐
Irrigation System Efficiency	70% ETo (100% ETo for SLAs)	☐ Yes	☐	☐
	No overspray or runoff	☐ Yes	☐	☐
Irrigation System Design	System efficiency > 70%	☐ Yes	☐	☐
	Automatic, self-adjusting irrigation controllers	☐ No, not required for Tier 1 ☐ Yes	☐	☐
	Moisture sensor/rain sensor shutoffs	☐ Yes	☐	☐
	No sprayheads in < 8-ft wide area.	☐ Yes	☐	☐
Irrigation Time	System only operates between 8 PM and 10 AM	☐ Yes	☐	☐
Metering	Separate irrigation meter	☐ No, not required because < 5,000 sq.ft. ☐ Yes	☐	☐
Swimming Pools / Spas	Cover highly recommended	☐ Yes ☐ No, not required	☐	☐
Water Features	Recirculating	☐ Yes	☐	☐
	Less than 10% of landscape area	☐ Yes	☐	☐
Documentation	Checklist	☐ Yes	☐	☐
	Landscape and Irrigation Design Plan	☐ Prepared by applicant ☐ Prepared by professional	☐	☐
	Water Budget (optional)	☐ Prepared by applicant ☐ Prepared by professional	☐	☐
Audit	Post-installation audit completed	☐ Completed by applicant ☐ Completed by professional	☐	☐

OUTDOOR WATER USE EFFICIENCY CHECKLIST

To Be Completed by Agency

Auditor:

Materials Received and Reviewed:

- ☐ Outdoor Water Use Efficiency Checklist
- ☐ Water Budget
- ☐ Landscape Plan
- ☐ Post-Installation Audit

Date Reviewed:

☐ Follow up required (explain):

Date Resubmitted:

Date Approved:

Dedicated Irrigation Meter Required:

Meter sizing:

Materials Required as Applicable

- ☐ Water Conservation in Landscaping Ordinance
- ☐ Outdoor Water Use Efficiency Checklist
- ☐ Water Budget Calculation Worksheets
- ☐ Plant List
- ☐ Other:

Measures Recommended as Applicable

- ☐ Drip irrigation
- ☐ Self-adjusting Irrigation Controller
- ☐ Plant palate
- ☐ Three (3) inches of mulch
- ☐ Soil amendment (e.g., compost)
- ☐ Grading
- ☐ Pool and/or spa cover
- ☐ Dedicated irrigation meter
- ☐ Other:

Comments:

Selected Definitions:

Tier 1	New construction and rehabilitated landscapes with irrigated landscape areas between 1,000 and 2,500 square feet requiring a building or landscape permit, plan check or design review, or new or expanded water service.
Tier 2	New construction and rehabilitated landscapes with irrigated landscape areas greater than 2,500 square feet requiring a building or landscape permit, plan check or design review.
ETo	Reference evapotranspiration means the quantity of water evaporated from a large field of four- to seven-inch tall, cool-season grass that is well watered. Reference evapotranspiration is used as the basis of estimating water budgets so that regional differences in climate can be accommodated.
SLA	Special Landscaped Area. Includes edible plants, areas irrigated with recycled water, surface water features using recycled water and areas dedicated to active play such as parks, sports fields, golf courses, and where turf provides a playing surface.
Professional	Professional is a "certified professional" or "authorized professional" that is a certified irrigation designer, a certified landscape irrigation auditor, a licensed landscape architect, a licensed landscape contractor, a licensed professional engineer, or any other person authorized by the state to design a landscape, an irrigation system, or authorized to complete a water budget, irrigation survey or irrigation audit.
Water Feature	A design element where open water performs an aesthetic or recreational function. Water features include ponds, lakes, waterfalls, fountains, artificial streams, spas, and swimming pools (where water is artificially supplied).

WATER BUDGET CALCULATION WORKSHEETS

SECTION B. WATER BUDGET CALCULATIONS

Section B1. Maximum Applied Water Allowance (MAWA)

The project's Maximum Applied Water Allowance shall be calculated using this equation:

MAWA = (ETo) (0.62) [(0.7 x LA) + (0.3 x SLA)]

where:

MAWA = Maximum Applied Water Allowance (gallons per year)
ETo = Reference Evapotranspiration (inches per year)
0.62 = Conversion factor (to gallons per square foot)
0.7 = ET Adjustment Factor (ETAF)
LA = Landscaped Area includes Special Landscape Area (square feet)
0.3 = the additional ET Adjustment Factor for Special Landscape Area (1.0 - 0.7 = 0.3)
SLA = Portion of the landscape area identified as Special Landscape Area (square feet)

Maximum Applied Water Allowance = _____gallons per year

Show calculations.

Effective Precipitation (Eppt)

If considering Effective Precipitation, use 25% of annual precipitation. Use the following equation to calculate Maximum Applied Water Allowance:

MAWA= (ETo – Eppt) (0.62) [(0.7 x LA) + (0.3 x SLA)]

Maximum Applied Water Allowance = _____gallons per year

Show calculations.

WATER BUDGET CALCULATION WORKSHEETS

SECTION A. HYDROZONE INFORMATION TABLE

Please complete the hydrozone table(s) for each hydrozone. Use as many tables as necessary to provide the square footage of landscape area per hydrozone.

Hydrozone (a)	Zone or Valve Number	Irrigation Method (b)	Area (Sq. Ft.)	Percent (%) of Landscape Area
Total				100%

(a) Hydrozone:
HW = High Water Use Plants
MW = Moderate Water Use Plants
LW = Low Water Use Plants

(b) Irrigation Method:
MS = Micro-spray
S = Spray
R = Rotor
B= Bubbler
D= Drip
O = Other

WATER BUDGET CALCULATION WORKSHEETS

SECTION B. WATER BUDGET CALCULATIONS

Section B2. Estimated Total Water Use (ETWU)

The project's Estimated Total Water Use is calculated using the following formula:

$$ETWU = (ETo)(0.62)\left(\frac{PF\,x\,HA}{IE} + SLA\right)$$

where:

ETWU = Estimated total water use per year (gallons per year)
ETo = Reference Evapotranspiration (inches per year)
PF = Plant Factor from WUCOLS
HA = Hydrozone Area [high, medium, and low water use areas] (square feet)
SLA = Special Landscape Area (square feet)
0.62 = Conversion Factor (to gallons per square foot)
IE = Irrigation Efficiency (minimum 0.70)

Hydrozone Table for Calculating ETWU

Please complete the hydrozone table(s). Use as many tables as necessary.

Hydrozone	Plant Water Use Type(s)	Plant Factor (PF)	Area (HA) (square feet)	PF x HA (square feet)

Estimated Total Water Use = _____ **gallons**

Show calculations.

18.17.100 Landscape Audit Report

The Landscape Audit Report shall include, but not limited to, the following criteria:

- ☐ Irrigation installed as specified in the Landscape Design Plan.
- ☐ Irrigation system tested and has uniform distribution.
- ☐ Irrigation system does not have excessive overflow onto hardscapes.
- ☐ Irrigation schedule has been prepared and is accessible.

- ☐ The Landscape and irrigation system has been installed as specified in the Landscape and Irrigation Design Plan and complies with the criteria of the Ordinance and the permit.

_____ _____

Signature of project applicant (tier 1) or Certified Landscape Irrigation Auditor. (tier 2) Date

ORDINANCE NO. 1845-2010

AN ORDINANCE OF THE CITY COUNCIL OF THE CITY OF BURLINGAME ESTABLISHING WATER CONSERVATION IN LANDSCAPING REGULATIONS

The Burlingame City Council does hereby ordain as follows:

Division 1. Findings:

WHEREAS, a reliable minimum supply of potable water is essential to the public health, safety and welfare of the people and economy of the City of Burlingame, California; and.

WHEREAS, careful water management requires active water conservation measures, not only in times of drought but continually, in order to ensure a reliable minimum supply of water to meet current and future water supply needs; and

WHEREAS, the California Water Conservation in Landscaping Act, also known as the State Landscape Model Ordinance ("Model Ordinance"), has been implemented by a Statewide Landscape Task Force which was overseen by the California Urban Water Conservation Council; and

WHEREAS, the California Water Conservation in Landscaping Act was amended by the legislature's enactment of AB 2717 (Chapter 682, Stats. 2004) and AB 1881 (Chapter 559, Stats. 2006); and

WHEREAS, AB 1881 requires cities and counties, no later than January 1, 2010, to adopt the updated Model Ordinance or their own local ordinance which is "at least as effective as" the Model Ordinance in conserving water; if cities and counties do not take such action, the State's Model Ordinance will be deemed to be automatically adopted by statute; and

WHEREAS, the City of Burlingame has developed this local Water Conservation In Landscaping Ordinance to meet the requirements and guidelines of the Model Ordinance and to address the unique physical characteristics, including average landscaped areas, within the City of Burlingame's jurisdiction in order to ensure that this Ordinance will be "at least as effective as" the Model Ordinance in conserving water; and

WHEREAS, although this Water Conservation in Landscaping Ordinance is more streamlined and simplified than the Model Ordinance, the City Council of the City of Burlingame finds that it is "at least as effective as" the Model Ordinance for the following reasons: (1) this Ordinance applies to more accounts than the Model Ordinance does because it lowers the size threshold for applicable landscapes from 2,500 square feet (or, in the case of single-family residences, from 5,000 square feet) to 1,500 square feet, to better reflect the typical landscaped areas located within the City of Burlingame's

boundaries; (2) this Ordinance includes a default turf restriction of 25% of the irrigated area and requires that at least 80% of the plants in non-turf landscape areas be native plants, low-water using plants, or no-water using plants (unless the applicant elects to perform a water budget); and (3) this Ordinance expands the requirement for dedicated irrigation meters to all accounts with landscaping greater than 5,000 square feet; the Model Ordinance does not contain any such default turf restrictions or specified plant requirements and only requires dedicated irrigation meters on non-residential accounts with landscaping greater than 5,000 square feet; and

WHEREAS, although this Water Conservation in Landscaping Ordinance is more streamlined and simplified than the Model Ordinance, the City Council of the City of Burlingame further finds that it is "at least as effective as" the Model Ordinance because this Ordinance includes water budget parameters and values and landscape parameters that are consistent with the Model Ordinance; by using the same water budget parameters as the Model Ordinance (e.g., plant factors, irrigation efficiency), this Ordinance will be as effective as the Model Ordinance in developing landscape water budgets; and, by using the same landscape parameters as the Model Ordinance for, among other things, slope restrictions and width restrictions for turf, irrigation times, and minimum mulch requirements, this Ordinance will be at least as effective as the Model Ordinance in achieving water savings; and

WHEREAS, Article X, Section 2 of the California Constitution and Section 100 of the California Water Code declare that the general welfare requires water resources be put to beneficial use, waste or unreasonable use or unreasonable method of use of water be prevented, and conservation of water be fully exercised with a view to the reasonable and beneficial use thereof; and

WHEREAS, the San Francisco Public Utilities Commission has imposed an interim water supply limitation on its wholesale customers, including local water suppliers, until at least 2018; and

WHEREAS, current supply and demand projections for the Bay Area Water Supply and Conservation Agency ("BAWSCA") member agencies, of which the City of Burlingame is one, indicate that, in the absence of increased water conservation, water demands will exceed available water supplies in 2015 and implementation of water conserving ordinances is one mechanism by which agencies can reduce future water demands and remain within existing supplies; and

WHEREAS, the City Council of the City of Burlingame finds and determines that this Ordinance is consistent with the provisions requiring reductions in outdoor water use for landscaping in the California Green Building Standards Code, as such provisions will be implemented in the coming years; such requirements include the development of a water budget for landscape irrigation in accordance with methodology outlined in either the Model Ordinance or pursuant to a locally adopted ordinance; and

WHEREAS, the State Legislature has identified the provision of a more reliable water supply and the protection, restoration and enhancement of the Delta ecosystem as high priorities for the California; accordingly, in November 2009, the State Legislature passed Senate Bill 7 (7th Extraordinary Session) requiring certain urban water suppliers to reduce per capita urban water use by 20% by the year 2020; and

WHEREAS, the City Council of the City of Burlingame finds that implementation of this Ordinance is consistent with the policies and goals established by the State Legislature in enacting SB 7 (7th Extraordinary Session); and

WHEREAS, Article XI, Section 7 of the California Constitution declares that a city or county may make and enforce within its limits all local, policy, sanitary, and other ordinances and regulations not in conflict with general laws; and

WHEREAS, the adoption of this Ordinance is separate and distinct from the City of Burlingame's possible future adoption of an ordinance relating to the use of recycled water in outdoor landscapes, as required pursuant to the Recycled Water in Landscaping Act, SB 2095 (Chapter 510, Stats. 2000); and

WHEREAS, the adoption and enforcement of this Ordinance is necessary to manage the City of Burlingame's potable water supply in the short and long-term, to avoid or minimize the effects of drought and shortage within the City of Burlingame and to ensure a reliable and sustainable minimum supply of water for the public health, safety

and welfare.

NOW, THEREFORE, THE CITY COUNCIL OF THE CITY OF BURLINGAME DOES ORDAIN AS FOLLOWS:

Division 2. Repeal of Chapter 18.17

Chapter 18.17 of the Burlingame Municipal Code, "Landscaping", is hereby repealed in its entirety.

Division 3. Enactment of Chapter 18.17

A new Chapter 18.17, entitled "Water Conservation in Landscape Ordinance", is hereby added to the Burlingame Municipal Code, to read as follows:

"18.19.010 Title

This Ordinance shall be known as the City of Burlingame Water Conservation in Landscape Ordinance.

18.17.020 Applicability

A. The provisions of this Ordinance shall apply to all of the following landscape projects:

1. Tier 1 Landscapes: All new construction and rehabilitated landscapes with irrigated landscape areas between 1,500 square feet and 2,500 square feet requiring a building or landscape permit, plan check or design review, or requiring new or expanded water service.

2. Tier 2 Landscapes: All new construction and rehabilitated landscapes with irrigated landscape areas equal to or greater than 2,500 square feet requiring a building or landscape permit, plan check or design review or requiring new or expanded water service.

3. Existing landscapes, including existing cemeteries, shall only be subject to the provisions for existing landscapes provided for in Section 18.17.120 "Provisions for Existing Landscapes Over One Acre in Size;" and

4. New and rehabilitated cemeteries shall only be subject to the provisions of Section 18.17.080 "Water Budget Calculations", Section 18.17.100 "Landscape Audit Report", and Section

18.17.110 "Landscape and Irrigation Maintenance Schedule."

B. The provisions of this Ordinance shall not apply to:

1. New construction and rehabilitated landscapes with irrigated landscape areas less than 1,500 square feet or that do not require a building or landscape permit, plan check or design review, or new or expanded water service;

2. Landscapes or portions of landscapes that are only irrigated for an establishment period;

3. Registered local, state or federal historical sites where landscaping establishes a historical landscape style, as determined by a public board or commission responsible for architectural review or historic preservation;

4. Ecological restoration or mined-land reclamation projects that do not require a permanent irrigation system; or

5. Community gardens or plant collections, as part of botanical gardens and arboretums open to the public, agricultural uses, commercial nurseries and sod farms.

18.17.030 Definitions

A. "applied water" means the portion of water supplied by the irrigation system to the landscape.

B. "automatic irrigation controller" means an automatic timing device used to remotely control valves that operate an irrigation system. Automatic irrigation controllers schedule irrigation events using either evapotranspiration (weather based) or soil moisture data.

C. "backflow prevention device" means a safety device used to prevent pollution or contamination of the water supply due to the reverse flow of water from the irrigation system.

D. "certified irrigation designer" means a person certified to design irrigation systems by an accredited academic institution a professional trade organization or other program such as the US Environmental Protection Agency's WaterSense irrigation designer certification program and Irrigation Association's Certified Irrigation Designer program.

E. "certified landscape irrigation auditor" means a person certified to perform landscape irrigation audits by an accredited academic institution, a professional trade organization or other program such as the US Environmental Protection Agency's WaterSense irrigation auditor certification program and Irrigation Association's Certified Landscape Irrigation Auditor program.

F. "certified professional" or "authorized professional" means a certified irrigation designer, a certified landscape irrigation auditor, a licensed landscape architect, a licensed landscape contractor, a licensed professional engineer, or any other person authorized by the state to design a landscape, an irrigation system, or authorized to complete a water budget.

G. "conversion factor (0.62)" means the number that converts acre-inches per acre per year to gallons per square foot per year

H. "drip irrigation" means any non-spray low volume irrigation system utilizing emission devices with a flow rate measured in gallons per hour. Low volume irrigation systems are specifically designed to apply small volumes of water slowly at or near the root zone of plants.

I. "ecological restoration project" means a project where the site is intentionally altered to establish a defined, indigenous, historic ecosystem.

J. "effective precipitation" or "usable rainfall" (Eppt) means the portion of total precipitation which becomes available for plant growth.

K. "establishment period" means the first year after installing the plant in the landscape or the first two years if irrigation will be terminated after establishment. Typically, most plants are established after one or two years of growth.

L. "Estimated Total Water Use" (ETWU) means the total water used for the landscape as described in Section 18.17.080 "Water Budget Calculations."

M. "ET adjustment factor" (ETAF) means a factor of 0.7, that, when applied to reference evapotranspiration, adjusts for plant factors and irrigation efficiency, two major influences upon the amount of water that needs to be applied to the landscape. ETAF for a Special Landscape Area shall not exceed 1.0. ETAF for existing non-rehabilitated landscapes shall not exceed 0.8.

N. "evapotranspiration rate" means the quantity of water evaporated from adjacent soil and other surfaces and transpired by plants during a specified time.

O. "flow rate" means the rate at which water flows through pipes, valves and emission devices, measured in gallons per minute, gallons per hour, or cubic feet per second.

P. "hardscapes" means any durable material (pervious and non-pervious).

Q. "hydrozone" means a portion of the landscaped area having plants with similar water needs. A hydrozone may be irrigated or non-irrigated.

R. "invasive plant species" means species of plants not historically found in California that spread outside cultivated areas and can damage environmental or economic resources. "Noxious weeds" means any weed designated by the Weed Control Regulations in the Weed Control Act and identified on a Regional District noxious weed control list. Lists of invasive plants are maintained at the California Invasive Plant Inventory and USDA invasive and noxious weeds database.

S. "irrigation audit" means an in-depth evaluation of the performance of an irrigation system. An irrigation audit includes, but is not limited to: inspection, system tune-up, system test with distribution uniformity or emission uniformity, reporting overspray or runoff that causes overland flow, and preparation of an irrigation schedule.

T. "irrigation efficiency" (IE) means the measurement of the amount of water beneficially used divided by the amount of water applied. Irrigation efficiency is derived from measurements and estimates of irrigation system characteristics and management practices. The minimum average irrigation efficiency for purposes of this Ordinance is 70%. Greater irrigation efficiency can be expected from well-designed and maintained systems.

U. "irrigation survey" means an evaluation of an irrigation system that is less detailed than an irrigation audit. An irrigation survey includes, but is not limited to: inspection, system test, and written recommendations to improve performance of the irrigation system.

V. "irrigation water use analysis" means an analysis of water use data based on meter readings and billing data.

W. "landscape architect" means a person who holds a license to practice landscape architecture in California as further defined by the

California Business and Professions Code, Section 5615.

X. "landscape area" means all the planting areas, turf areas, and water features in a landscape design plan subject to the Maximum Applied Water Allowance calculation. The landscape area does not include footprints of buildings or structures, sidewalks, driveways, parking lots, decks, patios, gravel or stone walks, other pervious or non-pervious hardscapes, other non-irrigated areas designated for non-development (e.g., open spaces and existing native vegetation), agricultural uses, commercial nurseries and sod farms.

Y. "landscape contractor" means a person licensed by the State of California to construct, maintain, repair, install, or subcontract the development of landscape systems.

Z. "landscape project" means the total area comprising the landscape area, as defined in this Ordinance.

AA. "lateral line" means the water delivery pipeline that supplies water to the emitters or sprinklers from the valve.

BB. "local agency" means the City of Burlingame which is responsible for the adoption, implementation and enforcement of this Ordinance, including but not limited to approval of a permit and plan check or design review of a project.

CC. "local water purveyor" means any entity, including a public agency, city, county, district or private water company that provides retail water service.

DD. "low volume irrigation" means the application of irrigation water at low pressure through a system of tubing or lateral lines and low-volume emitters such as drip, drip lines, and bubblers.

EE. "low water use plant" means a plant species whose water needs are compatible with local climate and soil conditions. Species classified as "very low water use" and "low water use" by WUCOLS, having a regionally adjusted plant factor of 0.0 through 0.3, shall be considered low water use plants.

FF. "Maximum Applied Water Allowance" (MAWA) means the upper limit of annual applied water for the established landscaped area as specified in Section 18.17.080 "Water Budget Calculations."

GG. "mined-land reclamation projects" means any surface mining operation with a reclamation plan approved in accordance with the

Surface Mining and Reclamation Act of 1975.

HH. "mulch" means any organic material such as leaves, bark, straw, compost, or inorganic mineral materials such as rocks, gravel, and decomposed granite left loose and applied to the soil surface for the beneficial purposes of reducing evaporation, suppressing weeds, moderating soil temperature, and preventing soil erosion.

II. "native plant" means a plant indigenous to a specific area of consideration. For the purposes of these guidelines, the term shall refer to plants indigenous to the coastal ranges of Central and Northern California, and more specifically to such plants that are suited to the ecology of the present or historic natural community(ies) of the project's vicinity.

JJ. "new construction" means the construction of a new building or structure containing a landscape or other new land improvement, such as a park, playground, or greenbelt without an associated building.

KK. "no-water using plant" means a plant species with water needs that are compatible with local climate and soil conditions such that regular supplemental irrigation is not required to sustain the plant after it has become established.

LL. "operating pressure" means the pressure at which the parts of an irrigation system are designed by the manufacturer to operate.

MM. "overhead sprinkler irrigation systems" means systems that deliver water through the air (e.g., spray heads and rotors).

NN. "overspray" means the irrigation water which is delivered beyond the target area.

OO. "permit" means an authorizing document issued by local agencies for new construction or rehabilitated landscapes.

PP. "pervious" means any surface or material that allows the passage of water through the material and into the underlying soil.

QQ. "plant factor" or "plant water use factor" is a factor, when multiplied by ETo, estimates the amount of water needed by plants.

RR. "precipitation rate" means the rate of application of water measured in inches per hour.

SS. "project applicant" means the individual or entity submitting a Project Landscape Application required under Section 18.17.060, to request a permit, plan check, or design review from the City. A project applicant may be the property owner or his or her designee.

TT. "rain sensor" or "rain sensing shutoff device" means a component which automatically suspends an irrigation event when it rains.

UU. "recreational area" means areas dedicated to active play such as parks, sports fields, and golf courses where turf provides a playing surface.

VV. "reference evapotranspiration" or "ETo" means a standard measurement of environmental parameters which affect the water use of plants.

WW. "rehabilitated landscape" means any re-landscaping project that requires a permit, plan check, design review, or requires a new or expanded water service application.

XX. "runoff" means water which is not absorbed by the soil or landscape to which it is applied and flows from the landscape area.

YY. "soil moisture sensing device" or "soil moisture sensor" means a device that measures the amount of water in the soil. The device may also suspend or initiate an irrigation event.

ZZ. "Special Landscape Area" (SLA) means an area of the landscape dedicated solely to edible plants, areas irrigated with recycled water, water features using recycled water and areas dedicated to active play such as parks, sports fields, golf courses, and where turf provides a playing surface.

AAA. "sprinkler head" means a device which delivers water through a nozzle.

BBB. "station" means an area served by one valve or by a set of valves that operate simultaneously.

CCC. "turf" means a ground cover surface of mowed grass. Annual bluegrass, Kentucky bluegrass, Perennial ryegrass, Red fescue, and Tall fescue are cool-season grasses. Bermuda grass, Kikuyu grass, Seashore Paspalum, St. Augustine grass, Zoysia grass, and Buffalo grass are warm-season grasses.

DDD. "valve" means a device used to control the flow of water in the

irrigation system.

EEE. "water feature" means a design element where open water performs an aesthetic or recreational function. Water features include ponds, lakes, waterfalls, fountains, artificial streams, spas, and swimming pools (where water is artificially supplied).

FFF. "WUCOLS" means the Water Use Classification of Landscape Species published by the University of California Cooperative Extension, the Department of Water Resources and the Bureau of Reclamation, 2000.

18.17.040 Water Conservation in Landscaping Ordinance Requirements

A. All owners of new construction and rehabilitated landscapes of applicable sizes shall:

1. complete the Landscape Project Application (Section 18.17.060); and

2. comply with the Landscape and Irrigation Maintenance Schedule (Section 18.17.110) requirements of this Ordinance.

B. All owners of existing landscapes over one acre in size, even if installed before enactment of this Ordinance, shall:

1. comply with City programs that may be instituted relating to irrigation audits, surveys and water use analysis, and

2. shall maintain landscape irrigation facilities to prevent water waste and runoff.

18.17.050 Compliance with Ordinance.

A. The City shall:

1. Provide the project applicant with the Ordinance and Landscape Project Application requirements and the procedures for permits, plan checks, design reviews, or new or expanded water service;

2. Review the Landscape Project Application submitted by the project applicant;

3. Approve or deny the project applicant's Landscape Project Application submittal;

4. Issue or approve a permit, plan check or design review that complies with the approved Landscape Project Application or approve a new or expanded water service application that complies with the approved Landscape Project Application;

B. The project applicant shall:

1. Prior to construction, submit all portions of the Landscape project Application, except the Landscape Audit Report, to the City;

2. Construct the Project in compliance with the minimum water use efficiency standards for indoor fixtures and appliances provided for in the Indoor Water Use Efficiency Table and Checklist;

3. After construction, submit the Landscape Audit Report portion of the Landscape Project Application to the City.

18.17.060 Landscape Project Application

A. The elements of a landscape must be designed to achieve water efficiency and will comply with the criteria described in this Ordinance. In completing the Landscape Project Application, project applicants may choose one of two options to demonstrate that the landscape meets the Ordinance's water efficiency goals. Regardless of which option is selected, the applicant must complete and comply with all other elements of the Ordinance. The options include:

1. Planting restrictions:

a. The turf area may not be more than 25% of the landscape area; and

b. At least 80% of the plants in non-turf landscape areas shall be native plants, low-water using plants, or no-water using plants; or the

2. Water Budget Calculation option (Section 18.17.080).

B. The Landscape Project Application shall include the following elements:

1. Project Information;

2. Outdoor Water Use Efficiency Checklist (Section 18.17.070);

3. Water Budget Calculations, if applicant selects to use a water budget approach rather than comply with the turf area limitations or specified plant type restrictions (Section 18.17.080);

4. Landscape and Irrigation System Design Plans (Section 18.17.090);

5. Landscape Audit Report (Section 18.17.100).

18.17.070 Outdoor Water Use Efficiency Checklist

The City of Burlingame has developed an Outdoor Water Use Efficiency Checklist (Checklist), based on the criteria described below. For Tier 1 projects, either the project applicant or a certified or authorized professional shall complete the Checklist and submit it to City along with the Landscape and Irrigation Design Plan. For Tier 2 projects, a certified or authorized professional shall complete and submit the Checklist to City along with the Landscape and Irrigation Design Plan.

A. Plant Material

1. Each hydrozone shall have plant materials with similar water use that are selected and planted appropriately based upon their adaptability to the climatic, geologic, and topographical conditions of the project site.

2. The turf area shall not be more than 25% of the landscape area], unless the project applicant develops a site-specific water budget and the ETWU of the landscape area does not exceed the MAWA.

3. Turf shall not be planted on slopes greater than 25% or in areas that are less than eight feet wide, unless irrigated with subsurface irrigation or a low volume irrigation system.

4. At least 80% of the plants in non-turf landscape areas shall be native plants, low-water using plants, or no-water using plants, unless the project applicant develops a site-specific water budget and the ETWU of the landscaped area does not exceed the MAWA.

5. Fire-prone plant materials and highly flammable mulches should be avoided.

6. The use of invasive and/or noxious plant species is strongly discouraged.

7. The architectural guidelines of a common interest development shall not prohibit or include conditions that have the effect of prohibiting the use of low-water use plants as a group.

B. Mulch

A minimum two-inch layer of mulch shall be applied on all exposed soil surfaces of planting areas, although a three-inch layer is recommended.

C. Irrigation System

An irrigation system shall meet all the requirements listed in this section and the manufacturers' recommendations. The irrigation system and its related components shall be planned and designed to allow for proper installation, management, and maintenance.

1. Dedicated landscape water meters shall be required for landscape areas greater than 5,000 square feet and are highly recommended for landscape areas greater than 2,500 square feet.

2. Tier 2 Landscapes are required to have automatic irrigation controllers that utilize either evapotranspiration or soil moisture sensor data for irrigation scheduling.

3. Sensors (rain, freeze, wind, etc.), either integral or auxiliary, that suspend or alter irrigation operation during unfavorable weather conditions shall be required on all irrigation systems.

4. The irrigation system shall be designed to prevent runoff, low head drainage, overspray, or other similar conditions.

5. Low volume irrigation required in mulched areas, in areas with slope greater than 25%, and within 24-inches of a non-permeable surface, or in narrow or irregularly shaped areas that are less than eight feet in width in any direction.

6. Average irrigation efficiency is assumed to be 70%. Irrigation systems shall be designed, maintained, and managed to meet or exceed an average landscape irrigation efficiency of 70%.

7. Irrigation shall be scheduled between 8:00 p.m. and 10:00 a.m., unless unfavorable weather prevents it or otherwise renders irrigation unnecessary.

D. Hydrozone

1. Each valve shall irrigate a hydrozone with similar site, slope, sun exposure, soil conditions, and plant materials with similar water use.

2. Sprinkler heads and other emission devices shall be selected based on what is appropriate for the plant type within that hydrozone.

3. Where feasible, trees shall be placed on separate valves from shrubs, groundcovers, and turf.

4. Individual hydrozones that mix plants with different water uses may be allowed if a water budget is performed, and the plant factor calculation is based on the proportion of the respective plant water uses or the plant factor of the higher water using plant is used.

E. Water Features

1. Recirculating water systems will be used for water features.

2. The surface area of a water feature will not exceed 10% of the landscape area and will be counted as a high-water using plant for purposes of a water budget calculation.

3. Pool and spa covers are highly recommended.

F. Soil Amendments

Soil amendments, such as compost, shall be incorporated according to the soil conditions at the project site and based on what is appropriate for the selected plants.

18.17.080 Water Budget Calculations

The project applicant may elect to complete a water budget calculation for the landscape project. A Tier 1 water budget may be developed and completed by the project applicant. A Tier 2 water budget calculation must be completed by a certified or authorized professional. Water budget calculations, if prepared, shall adhere to the following requirements:

A. The plant factor used shall be from WUCOLS. The plant factor ranges from 0.0 to 0.3 for low water use plants, from 0.4 to 0.6 for moderate water use plants, and from 0.7 to 1.0 for high water use plants.

B. All water features shall be included in the high water use hydrozone.

C. All Special Landscape Areas (SLA) shall be identified and their water use included in the water budget calculations.

D. The reference evapotranspiration adjustment factor (ETAF) for SLA shall not exceed 1.0. The ETAF for all other landscaped areas shall not exceed 0.7.

E. Irrigation system efficiency shall be greater than or equal to 70%.

F. Maximum Applied Water Allowance (MAWA) shall be calculated using the equation below:

$$MAWA = (ETo)\ (0.62)\ [(0.7 \times LA) + (0.3 \times SLA)]$$

Where:

MAWA = Maximum Applied Water Allowance (gallons per year)
ETo = Reference Evapotranspiration (inches per year
0.62 = Conversion Factor (to gallons)
0.7 = Reference Evapotranspiration Adjustment Factor (ETAF)
LA = Landscape Area including SLA (square feet)
0.3 = Additional Water Allowance for SLA
SLA = Special Landscape Area (square feet)

G. A local agency or project applicant may consider Effective Precipitation (25% of annual precipitation) in tracking water use and may use the following equation to calculate the MAWA:

$$MAWA = (ETo - Eppt)\ (0.62)\ [(0.7 \times LA) + (0.3 \times SLA)]$$

H. Estimated Total Water Use (ETWU) will be calculated using the equation below. The sum of the ETWU calculated for all hydrozones will not exceed the MAWA.

$$ETWU = (ETo)(0.62)\ \frac{PF \times HA}{IE} + SLA$$

Where:

ETWU = Estimated Total Water Use per year (gallons)
ETo = Reference Evapotranspiration (inches)
PF = Plant Factor from WUCOLS (see Section 491)
HA = Hydrozone Area [high, medium, and low water use areas] (square feet)
SLA = Special Landscape Area (square feet)

0.62 = Conversion Factor
IE = Irrigation Efficiency (minimum 0.70)

18.17.090 Landscape and Irrigation Design Plans

A. Tier 1 Landscapes: The Landscape and Irrigation Design Plan may be prepared by, and bear the signature of, the project applicant, or that of a certified or authorized professional.

B. Tier 2 Landscapes: The components of the Landscape and Irrigation Design Plan shall be prepared as follows:

1. The landscape design portion shall be prepared by, and bear the signature of, a licensed landscape architect, licensed landscape contractor, or that of a certified or authorized professional; and

2. The irrigation design portion shall be prepared by, and bear the signature of, a licensed landscape architect, certified irrigation designer, licensed landscape contractor, or that of a certified or authorized professional.

C. The landscape design portion of the Landscape and Irrigation Design Plan, at a minimum, shall:

1. Delineate and label each hydrozone;

2. Identify each hydrozone as low, moderate, high water, or mixed water use;

3. Identify Special Landscape Areas (i.e., recreational areas; areas permanently and solely dedicated to edible plants; areas irrigated with recycled water);

4. Identify type of mulch and application depth;

5. Identify type and surface area of water features;

6. Identify hardscapes (pervious and non-pervious); and

7. Contain the following statement: "I have complied with the criteria of the Water Conservation in Landscaping Ordinance and applied them for the efficient use of water in the Landscape and Irrigation Design Plan."

D. The irrigation design portion of the Landscape and Irrigation Design Plan, at a minimum, shall contain:

1. Location and size of separate water meters for landscape;

2. Location, type and size of all components of the irrigation system, including controllers, main and lateral lines, valves, sprinkler heads, moisture sensing devices, rain switches, quick couplers, pressure regulators, and backflow prevention devices;

3. Static water pressure at the point of connection to the public water supply;

4. Flow rate (gallons per minute), application rate (inches per hour), and design operating pressure (pressure per square inch) for each station;

5. Irrigation schedule;

6. The following statement: "I have complied with the criteria of the Water Conservation in Landscaping Ordinance and applied them accordingly for the efficient use of water in the Landscape and Irrigation Design Plan."

E. Grading

If the Landscape Project will be graded, then the grading shall be designed to minimize soil erosion, runoff, and water waste. All grading should be conducted to:

1. Maintain all irrigation and normal rainfall within property lines and avoid drainage on to non-permeable hardscapes;

2. Avoid disruption of natural drainage patterns and undisturbed soil;

3. Avoid soil compaction in landscape areas; and

4. Be consistent with city and county grading requirements.

18.17.100 Landscape Audit Report

A. Tier 1 Landscapes: Landscape irrigation audits for new or rehabilitated landscapes installed after March 18, 2010 shall be conducted after the landscaping and irrigation systems have been installed. The audit may be conducted by the project applicant or by a certified landscape irrigation auditor.

B. Tier 2 Landscapes: Landscape irrigation audits for new or rehabilitated landscapes installed after [Ordinance adoption date] shall be conducted by a certified landscape irrigation auditor after the landscaping and irrigation system have been installed.

C. The Landscape Audit Report shall include, but is not limited to: inspection to confirm that the landscaping and irrigation system were installed as specified in the Landscape and Irrigation Design Plan, system tune-up, system test with distribution uniformity, reporting overspray or run off that causes overland flow, and preparation of an irrigation schedule.

D. The Landscape Audit Report shall include the following statement: "The landscape and irrigation system has been installed as specified in the Landscape and Irrigation Design Plan and complies with the criteria of the Ordinance and the permit".

E. City shall administer on-going programs that may include, but not be limited to, post-installation landscape inspection, irrigation water use analysis, irrigation audits, irrigation surveys and water budget calculations to evaluate compliance with the MAWA.

18.17.110 Landscape and Irrigation Maintenance Schedule

Landscapes shall be maintained to ensure water use efficiency.

A. A regular maintenance schedule shall include, but not be limited to, routine inspection; adjustment and repair of the irrigation system and its components; aerating and dethatching turf areas; replenishing mulch; fertilizing; pruning; weeding in all landscape areas; and removing obstructions to emission devices.

B. Repair of all irrigation equipment shall be done with the originally installed components or their equivalents.

C. A Project applicant is encouraged to implement sustainable or environmentally-friendly practices for overall landscape maintenance.

18.17.120 Stormwater Management

Stormwater best management practices shall be implemented into the landscape and grading design plans to minimize runoff and to increase on-site retention and infiltration and should be consistent with city, county, state and federal stormwater management requirements.

18.17.120 Provisions for Existing Landscapes Over One Acre in Size

This section shall apply to all existing landscapes that were installed before March 18, 2010 and are over one acre in size.

A. Irrigation Audit, Irrigation Survey, and Irrigation Water Use Analysis.

1. For landscapes that have a water meter, the City shall administer programs that may include, but not be limited to, irrigation water use analyses, irrigation surveys, and irrigation audits to evaluate water use and provide recommendations as necessary to reduce landscape water use to a level that does not exceed the MAWA for existing landscapes. The MAWA for existing landscapes shall be calculated as:

$$MAWA = (0.8)\ (ETo)(LA)(0.62).$$

2. For landscapes that do not have a meter, the City shall administer programs that may include, but not be limited to, irrigation surveys and irrigation audits to evaluate water use and provide recommendations as necessary in order to prevent water waste.

3. All landscape irrigation audits for existing landscapes that are greater than one acre in size shall be conducted by a certified landscape irrigation auditor.

B. Water Waste Prevention.

The City shall prevent water waste resulting from inefficient landscape irrigation by prohibiting runoff from leaving the target landscape due to low head drainage, overspray, or other similar conditions where water flows onto adjacent property, non-irrigated areas, walks, roadways, parking lots, or structures.

18.17.130 Violations, Penalties and Enforcement

A. Violation Notice of Correction.

It is unlawful for any person, firm, partnership, association, or corporation subject to the requirements of this Ordinance to fail to comply with the outdoor water use efficiency requirements of this Ordinance.

B. Notice of Correction

Whenever the City determines that a violation of this Ordinance has occurred, the City may serve a notice of correction on the owner(s) of the property on which the violation is situated. The owner(s) of record shall have ninety (90) days to take corrective action.

C. Enforcement.

If the owner of the property which is the subject of the violation fails to take corrective action within ninety (90) days, the City may enforce this ordinance according to the provisions of Chapter 1.12 of this code.

18.17.140 Public Education

A. The City shall provide information to all applicants regarding the design, installation, management, and maintenance of water-efficient landscapes and irrigation systems.

B. All model homes that are landscaped shall use signs and written information to demonstrate the principles of water-efficient landscapes that are described in this Ordinance."

Division 4. Severability

If any section, subsection, provision or part of this Ordinance, or its application to any person or circumstance, is held to be unconstitutional or otherwise invalid, the remainder of this Ordinance, and the application of such provision to other person or circumstances, shall not be affected thereby and shall remain in full force and effect and, to that end, the provisions of this Ordinance are severable.

Division 5. Ordinance Categorically Exempt

The City Council of the City of Burlingame finds and determines that this Ordinance is not subject to the California Environmental Quality Act (Public Resources Code Section 2100 et seq.) ("CEQA") pursuant to Section 15307 (the activity assures the maintenance, restoration, enhancement, or protection of a natural resource) and Section 15378(b)(2) (the activity is not a project as it involves general policy and procedure making) of the State CEQA Guidelines, California Code of Regulations, Title 14, Chapter 3, since it makes and implements policies and procedures to ensure that water resources are conserved by reducing water consumption through the establishment of a structure for planning, designing, installing, maintaining and managing water-efficient landscapes.

Division 6. Effective Date

This Ordinance shall become effective on March 18, 2010.

Cathy Baylock, Mayor

I, Mary Ellen Kearney, City Clerk of the City of Burlingame, do hereby certify that the foregoing ordinance was introduced at a regular meeting of the City Council held on the 1st day of February, 2010, and adopted thereafter at a regular meeting of the City Council held on the 16th day of February, 2010, by the following vote:

AYES: Councilmembers: BAYLOCK, BROWNRIGG, DEAL, KEIGHRAN, NAGEL
NOES: Councilmembers: NONE
ABSENT: Councilmembers: NONE

Mary Ellen Kearney, City Clerk

Project Comments

Date: January 21, 2016

To:

0 Engineering Division
(650) 558-7230

0 Building Division
(650) 558-7260

0 Parks Division
(650) 558-7334

0 Fire Division
(650) 558-7600

0 Stormwater Division
(650) 342-3727

0 City Attorney
(650) 558-7204

From: Planning Staff

Subject: Request for Commercial Design Review and Special Permit for construction of a new 4-story commercial building with three levels of underground parking at **225 California Drive, zoned HMU, APN: 029-211-080**

Staff Review: **February 8, 2016**

Resubmittal:

No comments at this time.

Reviewed by: CReed **Date:** 2/22/16

Project Comments

Date: September 17, 2015

To:

0 Engineering Division
(650) 558-7230

0 Building Division
(650) 558-7260

0 Parks Division
(650) 558-7334

X Fire Division
(650) 558-7600

0 Stormwater Division
(650) 342-3727

0 City Attorney
(650) 558-7204

From: Planning Staff

Subject: Request for Environmental Review and Design Review for a new, four story commercial building (retail on the ground floor and three stories of office) at **225 California Drive, zoned HMU (Howard Mixed Use), APN: 029-211-080**

Staff Review: **September 21, 2015**

No additional comments at this time. All previous comments still apply.

Reviewed by: Christine Reed CReed **Date: 9-21-15**

Project Comments

Date: June 4, 2015

To:

0 Engineering Division
(650) 558-7230

0 Building Division
(650) 558-7260

0 Parks Division
(650) 558-7334

X Fire Division
(650) 558-7600

0 Stormwater Division
(650) 342-3727

0 City Attorney
(650) 558-7204

From: Planning Staff

Subject: Request for Environmental Review, Design Review, Special Permit and Parking Variance for a new, four story commercial building (retail on the ground floor and three stories of office) at **225 California Drive, zoned HMU (Howard Mixed Use), APN: 029-211-080**

Staff Review: **June 8, 2015**

Resubmittal review:

No further comments.

Reviewed by: Christine Reed CReed **Date: 6-9-15**

Project Comments

Date: April 21, 2015

To:

0 Engineering Division
(650) 558-7230

0 Building Division
(650) 558-7260

0 Parks Division
(650) 558-7334

X Fire Division
(650) 558-7600

0 Stormwater Division
(650) 342-3727

0 City Attorney
(650) 558-7204

From: Planning Staff

Subject: Request for Environmental Review, Design Review, Special Permit and Parking Variance for a new, four story commercial building (retail on the ground floor and three stories of office) at **225 California Drive, zoned HMU (Howard Mixed Use), APN: 029-211-080**

Staff Review: **April 27, 2015**

1. The building shall be equipped with an approved NFPA 13 Sprinkler System throughout. Sprinkler drawings shall be submitted and approved by the Central County Fire Department prior to installation. The system shall be electronically monitored by an approved central receiving station.
2. The applicant shall ensure proper drainage in accordance with the City of Burlingame Engineering Standards is available for the fire sprinkler main drain and inspector test on the building plumbing drawings. These items may drain directly to landscape or in the sewer with an air gap.
3. The building shall be equipped with an approved Class I NFPA 14 Standpipe System. Outlets within the stairwell shall be located at intermediate landings. The standpipe system shall be submitted and approved by the Central County Fire Department prior to installation. **The system shall be installed and operable prior to construction of the four story of the structure.**
4. The fire protection underground shall be submitted and approved by the Burlingame Building Department prior to installation.
5. The fire sprinkler system and fire standpipe system will not be approved by the Central County Fire Department until the fire protection underground has been submitted and approved by the Burlingame Building Department.
6. Fire alarm system shop drawings shall be submitted for review and approval by the Central County Fire Department prior to installation. Fire alarm system shall include monitoring of the fire protection system and also include monitoring of any fixed suppression systems including the hood and duct extinguishing system.
7. Notification of electronic monitoring of the fire sprinkler system shall be submitted and approved by the Central County Fire Department prior to installation. The system shall indicate water flow by floor.
8. The further point of the building from fire department access exceeds more than 150 feet in distance. See §902, UFC Please adhere to the required conditions of the Alternate Means of Protection dated May 1st, 2015.

Reviewed by: [illegible] **Date:** 19 May 15

Project Comments

Date: January 21, 2016

To:

0 Engineering Division
(650) 558-7230

0 Building Division
(650) 558-7260

0 Parks Division
(650) 558-7334

0 Fire Division
(650) 558-7600

0 Stormwater Division
(650) 342-3727

0 City Attorney
(650) 558-7204

From: Planning Staff

Subject: Request for Commercial Design Review and Special Permit for construction of a new 4-story commercial building with three levels of underground parking at **225 California Drive, zoned HMU, APN: 029-211-080**

Staff Review: **February 8, 2016**

No further comments at this time.

Reviewed by: Carolyn Cato **Date:** 2/9/16

Project Comments

Date: September 17, 2015

To:

0 Engineering Division
(650) 558-7230

0 Building Division
(650) 558-7260

0 Parks Division
(650) 558-7334

0 Fire Division
(650) 558-7600

X Stormwater Division
(650) 342-3727

0 City Attorney
(650) 558-7204

From: Planning Staff

Subject: Request for Environmental Review and Design Review for a new, four story commercial building (retail on the ground floor and three stories of office) at **225 California Drive, zoned HMU (Howard Mixed Use), APN: 029-211-080**

Staff Review: **September 21, 2015**

Project proponent submitted a completed a stormwater compliance "C.3 and C.6 Development Review Checklist." Proponent submitted and proposed several site design measures to comply with the C.3. and C.6 requirements. Previous comments shall be addressed during the building permit issuance. No additional comments.

Please contact Kiley Kinnon, NPDES Stormwater Coordinator, for assistance at (650) 342-3727.

Reviewed by: KJK **Date: 09/24/15**

Project Comments

Date: June 4, 2015

To:

0 Engineering Division
(650) 558-7230

0 Building Division
(650) 558-7260

0 Parks Division
(650) 558-7334

0 Fire Division
(650) 558-7600

X Stormwater Division
(650) 342-3727

0 City Attorney
(650) 558-7204

From: Planning Staff

Subject: Request for Environmental Review, Design Review, Special Permit and Parking Variance for a new, four story commercial building (retail on the ground floor and three stories of office) at **225 California Drive, zoned HMU (Howard Mixed Use), APN: 029-211-080**

Staff Review: **June 8, 2015**

Project proponent submitted a completed stormwater compliance C.3 and C.6 Development Review Checklist. Proponent submitted and proposed several site design measures to comply with the C.3.and C.6 requirements. Previous comments shall be addressed during the building permit issuance."

Please contact Kiley Kinnon, NPDES Stormwater Coordinator, for assistance at (650) 342-3727.

Reviewed by: KJK **Date: 06/09/15**

Project Comments

Date: April 21, 2015

To:

0 Engineering Division
(650) 558-7230

0 Building Division
(650) 558-7260

0 Parks Division
(650) 558-7334

0 Fire Division
(650) 558-7600

X Stormwater Division
(650) 342-3727

0 City Attorney
(650) 558-7204

From: Planning Staff

Subject: Request for Environmental Review, Design Review, Special Permit and Parking Variance for a new, four story commercial building (retail on the ground floor and three stories of office) at **225 California Drive, zoned HMU (Howard Mixed Use), APN: 029-211-080**

Staff Review: **April 27, 2015**

1. This project may be required to comply with the C.3 and C.6 provisions of the San Francisco Bay Municipal Regional Stormwater NPDES Permit (MRP). If the project will create and/or replace 10,000 square feet or more of impervious surface and; the project will replace 50 percent or more of site impervious surface, then stormwater source control and treatment requirements shall apply to the entire project site. A summary of applicable requirements is attached. The project proponent must complete, sign and submit, to the City, the appropriate form for each applicable requirement.

2. **Please complete, sign and return the following attached forms:**
   - A. **C.3 and C.6 Development Review Checklist.**
   - B. **Worksheet F, Special Projects.**
   - C. **Worksheet D-2, Feasibility of Rainwater Harvesting and Use.**

For additional information, including downloadable electronic files, please see the C.3 Stormwater Technical Guidance at www.flowstobay.org

3. Any construction project in the City, regardless of size, shall comply with the city's stormwater NPDES permit to prevent construction activity stormwater pollution. Project proponents shall ensure that all contractors implement appropriate and effective Best Management Practices (BMPs) during all phases of construction, including demolition. When submitting plans for a building permit, please include a list of construction BMPs as project notes, preferably, on a separate full size (2'x 3' or larger), plan sheet. A downloadable electronic file is available at: http://www.flowstobay.org/Construction

Project Comments

225 California Drive, continued

4. Required Best Management Practices (BMPs) apply to all construction projects utilizing architectural copper. Please read attachment "Requirements for architectural Copper." A downloadable electronic file is available at: http://www.flowstobay.org/files/newdevelopment/flyersfactsheets/ArchitecturalcopperBMPs.pdf

Please contact Kiley Kinnon, NPDES Stormwater Coordinator, for assistance at (650) 342-3727.

Reviewed by: KJK **Date: 04/27/15**

SAN MATEO COUNTYWIDE
Water Pollution
Prevention Program

C.3 and C.6 Development Review Checklist

Municipal Regional Stormwater Permit (MRP)
Stormwater Controls for Development Projects

City of Burlingame
Environmental Services
NPDES Coordinator
1103 Airport Blvd
Burlingame, Ca 94011
Office: (650) 342-3727
Fax: (650) 342-3712

Project Information

I.A **Enter Project Data** *(For "C.3 Regulated Projects," data will be reported in the municipality's stormwater Annual Report.)*

Project Name: _____ Case Number: _____

Project Address & Cross St.: _____

Project APN: _____ Project Watershed: _____

Applicant Name: _____

Applicant Phone: _____ Applicant Email Address: _____

Development type: (check all that apply)

- ☐ Single Family Residential: A stand-alone home that is not part of a larger project.
- ☐ Single Family Residential: Two or more lot residential development.[1]
- ☐ Multi-Family Residential
- ☐ Commercial
- ☐ Industrial, Manufacturing
- ☐ Mixed-Use
- ☐ Streets, Roads, etc.
- ☐ 'Redevelopment' as defined by MRP: creating, adding and/or replacing exterior existing impervious surface on a site where past development has occurred.[2]
- ☐ **'Special land use categories'** as defined by MRP: (1) auto service facilities[3], (2) retail gasoline outlets, (3) restaurants, (4) uncovered parking area (stand-alone or part of a larger project)
- ☐ Institutions: schools, libraries, jails, etc.
- ☐ Parks and trails, camp grounds, other recreational
- ☐ Agricultural, wineries
- ☐ Kennels, Ranches
- ☐ Other, Please specify_____

Project Description[4]: _____
(Also note any past or future phases of the project.) _____
_____

I.A.1 Total Area of Site: _____ acres

I.A.2 Total Area of land disturbed during construction (include clearing, grading, excavating and stockpile area):_____ acres.

Certification:

I certify that the information provided on this form is correct and acknowledge that, should the project exceed the amount of new and/or replaced impervious surface provided in this form, the as-built project may be subject to additional improvements.

☐ Attach Preliminary Calculations ☐ Attach Final Calculations ☐ Attach copy of site plan showing areas

Name of person completing the form:_____ Title:_____

Signature:_____ Date:_____

Phone number: _____ Email address: _____

[1] Subdivisions or contiguous, commonly owned lots, for the construction of two or more homes developed within 1 year of each other are considered common plans of development and are subject to C.3 requirements.

[2] Roadway projects that replace existing impervious surface are subject to C.3 requirements only if one or more lanes of travel are added.

[3] See Standard Industrial Classification (SIC) codes here

[4] Project description examples: 5-story office building, industrial warehouse, residential with five 4-story buildings for 200 condominiums, etc.

I.B Is the project a "C.3 Regulated Project" per MRP Provision C.3.b?

I.B.1 Enter the amount of impervious surface[5] Retained, Replaced and/or Created by the project:

Table I.B.1 Impervious and Pervious Surfaces

Type of Impervious Surface	I.B.1.a Pre-Project Impervious Surface (sq.ft.)	I.B.1.b Existing Impervious Surface to be Retained[6] (sq.ft.)	I.B.1.c Existing Impervious Surface to be Replaced[6] (sq.ft.)	I.B.1.d New Impervious Surface to be Created[6] (sq.ft.)	I.B.1.e Post-Project Impervious Surface (sq.ft.) (=b+c+d)
Roof area(s)					
Impervious[5] sidewalks, patios, paths, driveways, streets					
Impervious[5] uncovered parking[7]					
Totals of Impervious Surfaces:					
I.B.1.f - Total Impervious Surface Replaced and Created *(sum of totals for columns I.B.1.c and I.B.1.d)*:					

Type of Pervious Surface	Pre-Project Pervious Surface (sq.ft.)	Post-project Pervious Surface (sq.ft.)
Landscaping		
Pervious Paving		
Green Roof		
Totals of Pervious Surfaces:		
Total Site Area (Total Impervious+Total Pervious=**I.A.1**)		

I.B.2 Please review and attach additional worksheets as required below using the Total Impervious Surface Replaced and Created in cell I.B.1.f from Table I.B.1 above and other factors:

	Check all that apply:	Check If Yes	Attach Worksheet
I.B.2.a	Does this project involve any earthwork?	☐	A
I.B.2.b	Is **I.B.1.f** greater than or equal to 2,500 sq.ft? *If YES, the Project is subject to Provision C.3.i.*	☐	B, C
I.B.2.c	Is the total Existing Impervious Surface to be Replaced (column **I.B.1.c**) 50 percent or more of the total Pre-Project Impervious Surface (column **I.B.1.a**)? *If YES, site design, source control and treatment requirements apply to the whole site; if NO, these requirements apply only to the impervious surface created and/or replaced.*	☐	
I.B.2.d	Is this project one of the Special Land Use Categories (box checked in section I.A. above) and is **I.B.1.f** greater than or equal to 5,000 sq.ft? *If YES, project is a C.3 Regulated Project.*	☐	D, D-1, D-2
I.B.2.e	Is **I.B.1.f** greater than or equal to 10,000 sq.ft? *If YES, project is a C.3 Regulated Project.*	☐	D, D-1, D-2
I.B.2.f	Is **I.B.1.f** greater than or equal to 43,560 sq.ft. (1 acre)? *If YES, project may be subject to Hydromodification Management requirements.*	☐	E
I.B.2.g	Is **I.A.2** (pg. 1) greater than or equal to 1 acre? *If YES, obtain coverage under the state's Construction General Permit and submit to the municipality a copy of your Notice of Intent. See: www.swrcb.ca.gov/water_issues/programs/stormwater/construction.shtml.*	☐	
I.B.2.h	Is this a Special Project or does it have the potential to be a Special Project?	☐	F
I.B.2.i	Is this project a High Priority Site? (Determined by the Permitting Jurisdiction. High Priority Sites can include those located in or within 100 feet of a sensitive habitat, ASBS, or body of water, or on sites with slopes, and are subject to monthly inspections from Oct 1 to April 30.)	☐	G
B.2.10	For Municipal Staff Use Only (Alternative Certification, O&M Submittals, Project Close Out)	☐	G

[5] Per the MRP, pavement that meets the following definition of pervious pavement is NOT an impervious surface. Pervious pavement is defined as pavement that stores and infiltrates rainfall at a rate equal to immediately surrounding unpaved, landscaped areas, or that stores and infiltrates the rainfall runoff volume described in Provision C.3.

[6] "Retained" means to leave existing impervious surfaces in place, unchanged; "Replaced" means to install new impervious surface where existing impervious surface is removed anywhere on the same property; and "Created" means the amount of new impervious surface being proposed which exceeds the total existing amount of impervious surface at the property.

[7] Uncovered parking includes the top level of a parking structure.

Worksheet A

C6 – Construction Stormwater BMPs

Identify Plan sheet showing the appropriate construction Best Management Practices (BMPs) used on this project:
(Applies to all projects with earthwork)

Yes	Plan Sheet	Best Management Practice (BMP)
☒		Control and prevent the discharge of all potential pollutants, including pavement cutting wastes, paints, concrete, petroleum products, chemicals, wash water or sediments, rinse water from architectural copper, and non-stormwater discharges to storm drains and watercourses.
☒		Store, handle, and dispose of construction materials/wastes properly to prevent contact with stormwater.
☒		Do not clean, fuel, or maintain vehicles on-site, except in a designated area where wash water is contained and treated.
☒		Train and provide instruction to all employees/subcontractors re: construction BMPs.
☐		Protect all storm drain inlets in vicinity of site using sediment controls such as berms, fiber rolls, or filters.
☐		Limit construction access routes and stabilize designated access points.
☐		Attach the San Mateo Countywide Water Pollution Prevention Program's construction BMP plan sheet to project plans and require contractor to implement the applicable BMPs on the plan sheet.
☐		Use temporary erosion controls to stabilize all denuded areas until permanent erosion controls are established.
☐		Delineate with field markers clearing limits, easements, setbacks, sensitive or critical areas, buffer zones, trees, and drainage courses.
☐		Provide notes, specifications, or attachments describing the following: ▪ Construction, operation and maintenance of erosion and sediment controls, include inspection frequency; ▪ Methods and schedule for grading, excavation, filling, clearing of vegetation, and storage and disposal of excavated or cleared material; ▪ Specifications for vegetative cover & mulch, include methods and schedules for planting and fertilization; ▪ Provisions for temporary and/or permanent irrigation.
☐		Perform clearing and earth moving activities only during dry weather.
☐		Use sediment controls or filtration to remove sediment when dewatering and obtain all necessary permits.
☐		Trap sediment on-site, using BMPs such as sediment basins or traps, earthen dikes or berms, silt fences, check dams, soil blankets or mats, covers for soil stock piles, etc.
☐		Divert on-site runoff around exposed areas; divert off-site runoff around the site (e.g., swales and dikes).
☐		Protect adjacent properties and undisturbed areas from construction impacts using vegetative buffer strips, sediment barriers or filters, dikes, mulching, or other measures as appropriate.

Worksheet B

C3 - Source Controls

Select appropriate source controls and identify the detail/plan sheet where these elements are shown.

Yes	Detail/Plan Sheet No.	Features that require source control measures	Source Control Measures (Refer to Local Source Control List for detailed requirements)
☐		Storm Drain	Mark on-site inlets with the words "No Dumping! Flows to Bay" or equivalent.
☐		Floor Drains	Plumb interior floor drains to sanitary sewer[8] [or prohibit].
☐		Parking garage	Plumb interior parking garage floor drains to sanitary sewer.[8]
☐		Landscaping	▪ Retain existing vegetation as practicable. ▪ Select diverse species appropriate to the site. Include plants that are pest- and/or disease-resistant, drought-tolerant, and/or attract beneficial insects. ▪ Minimize use of pesticides and quick-release fertilizers. ▪ Use efficient irrigation system; design to minimize runoff.
☐		Pool/Spa/Fountain	Provide connection to the sanitary sewer to facilitate draining.[8]
☐		Food Service Equipment (non-residential)	Provide sink or other area for equipment cleaning, which is: ▪ Connected to a grease interceptor prior to sanitary sewer discharge.[8] ▪ Large enough for the largest mat or piece of equipment to be cleaned. ▪ Indoors or in an outdoor roofed area designed to prevent stormwater run-on and run-off, and signed to require equipment washing in this area.
☐		Refuse Areas	▪ Provide a roofed and enclosed area for dumpsters, recycling containers, etc., designed to prevent stormwater run-on and runoff. ▪ Connect any drains in or beneath dumpsters, compactors, and tallow bin areas serving food service facilities to the sanitary sewer.[8]
☐		Outdoor Process Activities [9]	Perform process activities either indoors or in roofed outdoor area, designed to prevent stormwater run-on and runoff, and to drain to the sanitary sewer.[8]
☐		Outdoor Equipment/ Materials Storage	▪ Cover the area or design to avoid pollutant contact with stormwater runoff. ▪ Locate area only on paved and contained areas. ▪ Roof storage areas that will contain non-hazardous liquids, drain to sanitary sewer[8], and contain by berms or similar.
☐		Vehicle/ Equipment Cleaning	▪ Roofed, pave and berm wash area to prevent stormwater run-on and runoff, plumb to the sanitary sewer[8], and sign as a designated wash area. ▪ Commercial car wash facilities shall discharge to the sanitary sewer.[8]
☐		Vehicle/ Equipment Repair and Maintenance	▪ Designate repair/maintenance area indoors, or an outdoors area designed to prevent stormwater run-on and runoff and provide secondary containment. Do not install drains in the secondary containment areas. ▪ No floor drains unless pretreated prior to discharge to the sanitary sewer.[8] ▪ Connect containers or sinks used for parts cleaning to the sanitary sewer.[8]
☐		Fuel Dispensing Areas	▪ Fueling areas shall have impermeable surface that is a) minimally graded to prevent ponding and b) separated from the rest of the site by a grade break. ▪ Canopy shall extend at least 10 ft. in each direction from each pump and drain away from fueling area.
☐		Loading Docks	▪ Cover and/or grade to minimize run-on to and runoff from the loading area. ▪ Position downspouts to direct stormwater away from the loading area. ▪ Drain water from loading dock areas to the sanitary sewer.[8] ▪ Install door skirts between the trailers and the building.
☐		Fire Sprinklers	Design for discharge of fire sprinkler test water to landscape or sanitary sewer.[8]
☐		Miscellaneous Drain or Wash Water	▪ Drain condensate of air conditioning units to landscaping. Large air conditioning units may connect to the sanitary sewer.[8] ▪ Roof drains from equipment drain to landscaped area where practicable. ▪ Drain boiler drain lines, roof top equipment, all wash water to sanitary sewer.[8]
☐		Architectural Copper Rinse Water	▪ Drain rinse water to landscaping, discharge to sanitary sewer[8], or collect and dispose properly offsite. See flyer "Requirements for Architectural Copper."

[8] Any connection to the sanitary sewer system is subject to sanitary district approval.

[9] Businesses that may have outdoor process activities/equipment include machine shops, auto repair, industries with pretreatment facilities.

Worksheet C

Low Impact Development – Site Design Measures

Select Appropriate Site Design Measures *(Required for C.3 Regulated Projects; all other projects are encouraged to implement site design measures, which may be required at municipality discretion.) Projects that create and/or replace 2,500 – 10,000 sq.ft. of impervious surface, and stand-alone single family homes that create/replace 2,500 sq.ft. or more of impervious surface, must include* ***one of Site Design Measures a through f*** *(Provision C.3.i requirements).*[10] *Larger projects must also include applicable Site Design Measures g through i. Consult with municipal staff about requirements for your project.*

Select appropriate site design measures and Identify the Plan Sheet where these elements are shown.

Yes	Plan Sheet Number	
☐		a. Direct roof runoff into cisterns or rain barrels and use rainwater for irrigation or other non-potable use.
☐		b. Direct roof runoff onto vegetated areas.
☐		c. Direct runoff from sidewalks, walkways, and/or patios onto vegetated areas.
☐		d. Direct runoff from driveways and/or uncovered parking lots onto vegetated areas.
☐		e. Construct sidewalks, walkways, and/or patios with pervious or permeable surfaces.
☐		f. Construct bike lanes, driveways, and/or uncovered parking lots with pervious surfaces.
☐		g. Limit disturbance of natural water bodies and drainage systems; minimize compaction of highly permeable soils; protect slopes and channels; and minimize impacts from stormwater and urban runoff on the biological integrity of natural drainage systems and water bodies;
☐		h. Conserve natural areas, including existing trees, other vegetation and soils.
☐		i. Minimize impervious surfaces.

Regulated Projects can also consider the following site design measures to reduce treatment system sizing:

Yes	Plan Sheet Number	
☐		j. Self-treating area (see Section 4.2 of the C.3 Technical Guidance)
☐		k. Self-retaining area (see Section 4.3 of the C.3 Technical Guidance)
☐		l. Plant or preserve interceptor trees (Section 4.1, C.3 Technical Guidance)

[10] See MRP Provision C.3.a.i.(6) for non-C.3 Regulated Projects, C.3.c.i.(2)(a) for Regulated Projects, C.3.i for projects that create/replace 2,500 to 10,000 sq.ft. of impervious surface and stand-alone single family homes that create/replace 2,500 sq.ft. or more of impervious surface.

Worksheet D

C3 Regulated Project - Stormwater Treatment Measures

Check all applicable boxes and indicate the treatment measure(s) included in the project.

Yes	
☐ Attach Worksheet F and Calculations	Is the project a **Special Project**?[11] If yes, consult with municipal staff about the need to evaluate the feasibility and infeasibility of 100% LID treatment. Indicate the type of non-LID treatment to be used, the hydraulic sizing method[12], and percentage of the amount of runoff specified in Provision C.3.d that is treated: (For the % not treated by non-LID measures, continue with Worksheet D-1) Non-LID Treatment Measures: / Hydraulic sizing method[12] / % of C.3.d amount of runoff treated ☐ Media filter ☐2.a ☐2.b ☐2.c ____% ☐ Tree well filter ☐2.a ☐2.b ☐2.c ____%
☐ Attach Worksheet D-1 and Calculations	It is **feasible** to treat the C.3.d amount of runoff using infiltration? Indicate the infiltration measures to be used, and hydraulic sizing method: Infiltration Measures: / Hydraulic sizing method[12] ☐ Bioinfiltration[13] ☐1.a ☐1.b ☐2.c ☐3 ☐ Infiltration trench ☐1.a ☐1.b ☐ Other (specify):
☐ Attach Plans showing system, connection to Recycled Water Line and/or Connection Approval Letter from Sanitary District ☐ Attach worksheet D-2 and Calculations	Is the project installing and using a **recycled water** plumbing system for non-potable water use and the installation of a second non-potable water system for harvested rainwater is impractical, and considered infeasible due to cost considerations? If yes, check the box below and skip ahead to worksheet D-3 (There is no need for further evaluation of Rainwater harvesting/use.) Recycled Water Measure: ☐ Recycled Water System for non-potable water use will be installed and used. It is **feasible** to treat the C.3.d amount of runoff using rainwater harvesting/use? Rainwater Harvesting/Use Measures: / Hydraulic sizing method[12] ☐ Rainwater Harvesting for indoor non-potable water use ☐1.a ☐1.b ☐ Rainwater Harvesting for landscape irrigation use ☐1.a ☐1.b
☐ Attach Worksheets D-1 and D-2 and Calculations	It is **infeasible** to treat the C.3.d amount of runoff using either infiltration or rainwater harvesting/use? Indicate the biotreatment measures to be used, and the hydraulic sizing method: Biotreatment Measures: / Hydraulic sizing method[12] ☐ Bioretention area ☐2.c ☐3 ☐ Flow-through planter ☐2.c ☐3 ☐ Other (specify): _____

A copy of the long term Operations and Maintenance (O&M) Agreement and Plan for this project will be required. Please contact the NPDES Representative of the applicable municipality for an agreement template and consult the C.3 Technical Guidance at www.flowstobay.org for maintenance plan templates for specific facility types.

[11] Special Projects are smart growth, high density, or transit-oriented developments with the criteria defined in Provision C.3.e.ii.(2), (3) or (4) (see Worksheet F).

[12] Indicate which of the following Provision C.3.d.i hydraulic sizing methods were used. Volume based approaches: 1(a) Urban Runoff Quality Management approach, or 1(b) 80% capture approach (recommended volume-based approach). Flow-based approaches: 2(a) 10% of 50-year peak flow approach, 2(b) 2 times the 85th percentile rainfall intensity approach, or 2(c) 0.2-Inch-per-hour intensity approach (recommended flow-based approach). Combination flow and volume-based approach: 3.

[13] See Section 6.1 of the C.3 Technical Guidance for conditions in which bioretention areas provide bioinfiltration.

Worksheet D-1
Feasibility of Infiltration

		Yes	No
D-1.0	**Infiltration Potential.** Based on site-specific soil report[14], do site soils either:		
	a. Have a saturated hydraulic conductivity (Ksat) less than 1.6 inches/hour), OR, if the Ksat rate is not available:	☐	☐
	b. Consist of Type C or D soils?	☐	☐
	➢ *If Yes, infiltration is not feasible – skip to D-1.9 below.*		
	➢ *If No, complete the Infiltration Feasibility checklist below:*		
	Evaluate infiltration feasibility:		
D-1.1	Would infiltration facilities[15] at this site conflict with the location of existing or proposed underground utilities or easements, or would the siting of infiltration facilities at this site result in their placement on top of underground utilities, or otherwise oriented to underground utilities, such that they would discharge to the utility trench, restrict access, or cause stability concerns? (If yes, attach evidence documenting this condition.)	☐	☐
D-1.2	Is there a documented concern that there is a potential on the site for soil or groundwater pollutants to be mobilized? (If yes, attach documentation of mobilization concerns.)	☐	☐
D-1.3	Are geotechnical hazards present, such as steep slopes, areas with landslide potential, soils subject to liquefaction, or would an infiltration facility[10] need to be built less than 10 feet from a building foundation or other improvements subject to undermining by saturated soils? (If yes, attach documentation of geotechnical hazard.)	☐	☐
D-1.4	Do local water district or other agency's policies or guidelines regarding the locations where infiltration may occur, the separation from seasonal high groundwater, or setbacks from potential sources of pollution, prevent infiltration devices[10] from being implemented at this site? (If yes, attach evidence documenting this condition.)	☐	☐
D-1.5	Would construction of an infiltration device[10] require that it be located less than 100 feet away from a septic tank, underground storage tank with hazardous materials, or other potential underground source of pollution? (If yes, attach evidence documenting this claim.)	☐	☐
D-1.6	Is there a seasonal high groundwater table or mounded groundwater that would be within 10 feet of the base of an infiltration device[10] constructed on the site? (If yes, attach documentation of high groundwater.)	☐	☐
D-1.7	Are there land uses that pose a high threat to water quality – including but not limited to industrial and light industrial activities, high vehicular traffic (i.e., 25,000 or greater average daily traffic on a main roadway or 15,000 or more average daily traffic on any intersecting roadway), automotive repair shops, car washes, fleet storage areas, or nurseries? (If yes, attach evidence documenting this claim.)	☐	☐
D-1.8	Is there a groundwater production well within 100 feet of the location where an infiltration device[10] would be constructed? (If yes, attach map showing the well.)	☐	☐
	Results of Feasibility Determination		
D-1.9	Infiltration is **Infeasible?** (If any answer to questions D-1.1 thru D-1.8 is "Yes" then Infiltration is Infeasible.) Continue to Worksheet D-2.	☐	☐
	Infiltration is **Feasible?** Do not fill out worksheet D-2. Continue to Worksheet D-3.	☐	☐

[14] If no site-specific soil report is available, refer to soil hydraulic conductivity maps in C.3 Technical Guidance Appendix I.

[15] For more information on infiltration facilities and devices, see Appendix E of the SMCWPPP C3TG Handbook.

Worksheet D-2
Feasibility of Rainwater Harvesting and Use

D-2.1 Potential Rainwater Capture Area

a. Enter the total square footage of impervious surface for this site from Table I.B.1 (Total Created and Replaced Impervious Surface from I.B.1.f) _____ Sq. ft.

b. If the existing impervious surface to be replaced (total from Column I.B.1.c in Table I.B.1) is 50% or more of the pre-project impervious surface (total from Column I.B.1.a in Table I.B.1), then enter the post-project impervious surface (total from Column I.B.1.e in Table I.B.1) in D-2.1.b. If not, enter zero in D-2.1.b. _____ Sq. ft.

c. Convert the larger of the amounts in Items D-2.1.a and D-2.1.b from square feet to acres (divide by 43,560).
This is the project's Potential Rainwater Capture Area, in acres. _____ Acres

D-2.2 Feasibility of Landscape Irrigation:

a. Enter area of post-project onsite landscaping (see Column I.B.1.e in Table I.B.1) _____ Acres

b. Multiply the Potential Rainwater Capture Area above (D-2.1.c) by times 3.2. _____ Acres

c. Is the amount in D-2.2.a (onsite landscaping) LESS than the amount in D-2.2.b (the product of 3.2 times the size of the Potential Rainwater Capture Area)[16]? ☐ Yes ☐ No

- *If Yes, continue to D-2.3.*
- *If No, there are two options:*
  1. *It may be possible to meet the treatment requirements by directing runoff from impervious areas to self-retaining areas (see Section 4.3 of the C.3 Technical Guidance).*
  2. *It may be possible use the C.3.d amount of runoff for irrigation. Refer to Table 11 and the curves in Appendix F of the LID Feasibility Report to evaluate feasibility of harvesting and using the C.3.d amount of runoff for irrigation. Complete the calculations and attach to this worksheet. If feasible that completes Worksheet D-2 and you may move on to Worksheet D-3.*

D-2.3 Feasibility Indoor Non-Potable Uses: *(check the box for the applicable project type, then fill in the requested information and answer the question):*[17]

☐ a. Residential Project

i. Number of dwelling units (total post-project): _____ Units

ii. Divide the amount in (i) by Potential Rainwater Capture Area (D-2.1.c): _____ Du/ac

iii. Is the amount in (ii) LESS than 124? ☐ Yes ☐ No

☐ b. Commercial Project

i. Floor area (total interior post-project square footage): _____ Sq.ft.

ii. Divide the amount in (i) by Potential Rainwater Capture Area (D-2.1.c): _____ Sq.ft./ac

iii. Is the amount in (ii) LESS than 84,000? ☐ Yes ☐ No

☐ c. School Project

i. Floor area (total interior post-project square footage): _____ Sq.ft.

ii. Divide the amount in (i) by Potential Rainwater Capture Area (D-2.1.c): _____ Sq.ft./ac

iii. Is the amount in (ii) LESS than 27,000? ☐ Yes ☐ No

---

[16] Landscape areas must be contiguous and within the same Drainage Management Area to irrigate with harvested rainwater via gravity flow.

[17] Rainwater harvested for indoor use is typically used for toilet/urinal flushing, industrial processes, or other non-potable uses.

☐ d. Industrial Project

i. Estimated demand for non-potable water (gallons/day): _____ Gal./day

ii. Is the amount in (i) LESS than 2,900? ☐ Yes ☐ No

☐ e. Mixed-Use Residential/Commercial Project[18]

	Residential	*Commercial*
i. Number of residential dwelling units and commercial floor area:	_____ Units	_____ Sq.ft.
ii. Percentage of total interior post-project floor area serving each activity:	_____ %	_____ %
iii. Prorated Potential Rainwater Capture Area per activity (multiply amount in D-2.1.c by the percentages in [ii]):	_____ Acres	_____ Acres
iv. Prorated project demand per impervious area (divide the amounts in [i] by the amounts in [iii]):	_____ Du/ac	_____ Sq.ft/ac

v. Is the amount in (iv) in the residential column <u>less</u> than 124, AND is the amount in the commercial column <u>less</u> than 84,000? ☐ Yes ☐ No

- *If you checked "Yes" for the above question for the applicable project type, rainwater harvesting for indoor use is considered <u>infeasible for that building</u>. If there is only one building on the site you are done with this worksheet. If there is more than one building on the site, for each that has an individual roof area of 10,000 sq. ft. or more, complete Sections D-2.2 and D-2.3 of this form for each building, Continue to D-2.4 if a "No" is checked for any building.*
- *If you checked "No" for the question applicable to the type of project, rainwater harvesting for indoor use may be <u>feasible</u>. Continue to D-2.4:*

D-2.4 Project Information

*- See definitions in Glossary (Attachment 1)

4.1 Project Type: _____ If residential or mixed use, enter # of dwelling units: _____

4.2 Enter square footage of non-residential interior floor area: _____

4.3 Total area being evaluated (entire project or individual roof with an area > 10,000 sq.ft.): _____ sq.ft.

4.4 If it is a **Special Project***, indicate the percentage of **LID treatment*** reduction: _____ percent
(Item 4.4 applies only to entire project evaluations, not individual roof area evaluations.)

4.5 Total area being evaluated, adjusted for Special Project LID treatment reduction credit: _____ sq.ft.
(This is the total area being evaluated that requires LID treatment.)

D-2.5 Calculate Area of Self-Treating Areas, Self-Retaining Areas, and Areas Contributing to Self-Retaining Areas.

5.1 Enter square footage of any **self-treating areas*** in the area that is being evaluated: _____ sq.ft.

5.2 Enter square footage of any **self-retaining areas*** in the area that is being evaluated: _____ sq.ft.

5.3 Enter the square footage of areas contributing runoff to **self-retaining area***: _____ sq.ft.

5.4 TOTAL of Items 5.1, 5.2, and 5.3: _____ sq.ft.

D-2.6 Subtract credit for self-treating/self-retaining areas from area requiring treatment.

6.1 Subtract the TOTAL in Item 5.4 from the area being evaluated (Item 4.5). This is the **potential rainwater capture area***. _____ sq.ft.

6.2 Convert the potential rainwater capture area (Item 6.1) from square feet to acres. _____ acres

D-2.7 Determine feasibility of use for toilet flushing based on demand

[18] For a mixed-use project involving activities other than residential and commercial activities, follow the steps for residential/commercial mixed-use projects. Prorate the Potential Rainwater Capture Area for each activity based on the percentage of the project serving each activity.

7.1	Project's dwelling units per acre of potential rainwater capture area (Divide the number in 4.1 by the number in 6.2).	_____	dwelling units/acre
7.2	Non-residential interior floor area per acre of potential rain capture area (Divide the number in 4.2 by the number in 6.2).	_____	Int. non-res. floor area/acre

Note: formulas in Items 7.1 and 7.2 are set up, respectively, for a residential or a non-residential project. Do not use these pre-set formulas for mixed use projects. ***For mixed use projects****, evaluate the residential toilet flushing demand based on the dwelling units per acre for the residential portion of the project (use a prorated acreage, based on the percentage of the project dedicated to residential use). Then evaluate the commercial toilet flushing demand per acre for the commercial portion of the project (use a prorated acreage, based on the percentage of the project dedicated to commercial use).*

7.3	Refer to the applicable countywide table in Attachment 2. Identify the number of dwelling units per impervious acre needed in your Rain Gauge Area to provide the toilet flushing demand required for rainwater harvest feasibility.	_____	dwelling units/acre
7.4	Refer to the applicable countywide table in Attachment 2. Identify the square feet of non-residential interior floor area per impervious acre needed in your Rain Gauge Area to provide the toilet flushing demand required for rainwater harvest feasibility.	_____	int. non-res. floor area/acre

Check "Yes" or "No" to indicate whether the following conditions apply. If "Yes" is checked for any question, then rainwater harvesting and use is infeasible. As soon as you answer "Yes", you can skip to Item D-2.9. If "No" is checked for all items, then rainwater harvesting and use is feasible and you must harvest and use the C.3.d amount of stormwater, unless you infiltrate the ***C.3.d amount of stormwater****.*

7.5	Is the project's number of dwelling units per acre of potential rainwater capture area (listed in Item 7.1) LESS than the number identified in Item 7.3?	☐ Yes	☐ No
7.6	Is the project's square footage of non-residential interior floor area per acre of potential rainwater capture area (listed in Item 7.2) LESS than the number identified in Item 7.4?	☐ Yes	☐ No

D-2.8 Determine feasibility of rainwater harvesting and use based on factors other than demand.

8.1	Does the requirement for rainwater harvesting and use at the project conflict with local, state, or federal ordinances or building codes?	☐ Yes	☐ No
8.2	Would the technical requirements cause the harvesting system to exceed 2% of the **Total Project Cost***, or has the applicant documented economic hardship in relation to maintenance costs? (If so, attach an explanation.)	☐ Yes	☐ No
8.3	Do constraints, such as a slope above 10% or lack of available space at the site, make it infeasible to locate on the site a cistern of adequate size to harvest and use the C.3.d amount of water? (If so, attach an explanation.)	☐ Yes	☐ No
8.4	Are there geotechnical/stability concerns related to the surface (roof or ground) where a cistern would be located that make the use of rainwater harvesting infeasible? (If so, attach an explanation.)	☐ Yes	☐ No
8.5	Does the location of utilities, a septic system and/or **Heritage Trees*** limit the placement of a cistern on the site to the extent that rainwater harvesting is infeasible? (If so, attach an explanation.)	☐ Yes	☐ No

Note: It is assumed that projects with significant amounts of landscaping will either treat runoff with landscape dispersal (self-treating and self-retaining areas) or will evaluate the feasibility of harvesting and using rainwater for irrigation using the curves in Appendix F of the LID Feasibility Report.

***- See definitions in Glossary (Attachment 1)**

D-2.9 Results of Feasibility Determination

		Infeasible	Feasible
a.	Based on the results of the feasibility analysis in Items 7.5, 7.6 and Section D-2.8, rainwater harvesting/use is (check one):	☐	☐

→ *If "FEASIBLE" is indicated for Item D-2.9.a the amount of stormwater requiring treatment must be treated with harvesting/use, unless it is infiltrated into the soil.*

→ *If "INFEASIBLE" is checked for Item D-2.9.a, then the applicant may use appropriately designed* ***bioretention**** *facilities (*see definitions in Glossary – Attachment 1) for compliance with C.3 treatment requirements. If Ksat > 1.6 in./hr., and infiltration is unimpeded by subsurface conditions, then the bioretention facilities are predicted to infiltrate 80% or more average annual runoff. If Ksat < 1.6, maximize infiltration of stormwater by using bioretention if site conditions allow, and remaining runoff will be discharged to storm drains via facility underdrains. If site conditions preclude infiltration, a lined bioretention area or flow-through planter may be used.*

Worksheet E

Hydromodification Management

E-1 Is the project a Hydromodification Management[19] (HM) Project?

E-1.1 Is the total impervious area increased over the pre-project condition?

- ☐ Yes. Continue to E-1.2
- ☐ No. The project is NOT required to incorporate HM Measures.
  Go to Item E-1.4 and check "No."

E-1.2 Is the site located in an HM Control Area per the HM Control Areas map (Appendix H of the C.3 Technical Guidance)?

- ☐ Yes. Continue to E-1.3
- ☐ No. Attach map, indicating project location. The project is NOT required to incorporate HM Measures.
  Skip to Item E-1.4 and check "No."

E-1.3 Has an engineer or qualified environmental professional determined that runoff from the project flows only through a hardened channel or enclosed pipe along its entire length before emptying into a waterway in the exempt area?

- ☐ Yes. Attach map of facility. Go to Item E-1.4 and check "Yes."
- ☐ No. Attach map, indicating project location. The project is NOT required to incorporate HM Measures.
  Skip to Item E-1.4 and check "No."

E-1.4 Is the project a Hydromodification Management Project?

- ☐ Yes. The project is subject to HM requirements in Provision C.3.g of the Municipal Regional Stormwater Permit.
- ☐ No. The project is EXEMPT from HM requirements.

➢ If the project is subject to the HM requirements, incorporate in the project flow duration control measures designed such that post-project discharge rates and durations match pre-project discharge rates and durations.

➢ The Bay Area Hydrology Model (BAHM) has been developed to help size flow duration controls. See www.bayareahydrologymodel.org. Guidance is provided in Chapter 7 of the C.3 Technical Guidance.

E-2 Incorporate HM Controls (if required)

Are the applicable items provided with the Plans?

Yes	No	NA	
☐	☐	☐	Site plans with pre- and post-project impervious surface areas, surface flow directions of entire site, locations of flow duration controls and site design measures per HM site design requirement
☐	☐	☐	Soils report or other site-specific document showing soil type(s) on site
☐	☐	☐	If project uses the Bay Area Hydrology Model (BAHM), a list of model inputs and outputs.
☐	☐	☐	If project uses custom modeling, a summary of the modeling calculations with corresponding graph showing curve matching (existing, post-project, and post-project with HM controls curves), goodness of fit, and (allowable) low flow rate.
☐	☐	☐	If project uses the Impracticability Provision, a listing of all applicable costs and a brief description of the alternative HM project (name, location, date of start up, entity responsible for maintenance).
☐	☐	☐	If the project uses alternatives to the default BAHM approach or settings, a written description and rationale.

[19] Hydromodification is the change in a site's runoff hydrograph, including increases in flows and durations that results when land is developed (made more impervious). The effects of hydromodification include, but are not limited to, increased bed and bank erosion of receiving streams, loss of habitat, increased sediment transport and/or deposition, and increased flooding. Hydromodification control measures are designed to reduce these effects.

MBH arch

September 17, 2015

City of Burlingame Plan Review Comments & Responses

To: City of Burlingame Planning Division
Kevin Gardiner, Planning Manager
501 Primrose Road
Burlingame, CA 94010

From: Ken Lidicker
MBH Architects
2470 Mariner Square Loop
Alameda, CA 94501

Re: 225 California drive
Burlingame, CA
MBH Project No: 49810.3PD

The following Permit Revision drawings are dated 17 SEPTEMBER 2015 titled "PLANNING REVIEW RESPONSE B".
All revisions have been identified with a revision bubble and Delta B.

The following are responses to the City of Burlingame Engineering Division, Plan Check Comments dated June 4, 2015.

Item	Comments	Sheet or Detail Reference
Engineering Division Comments – Martin Quan		
E1	*The project proposes to connect all storm water to Hatch Lane. Please show the current drainage pattern for the existing site and where flows are directed to now.* **Response:** **The current drainage pattern for the existing site is to the SW corner of the site on Hatch Lane.**	

RECEIVED
SEP 17 2015
CITY OF BURLINGAME
CDD-PLANNING DIV

MBH arch

E2	*The project proposes to use a contech stormfilter vault to treat 100% of the runoff. What sizing criterion was used and what size vault will be specified?* **Response:** **See attached cut sheet for the 3-cartridge Contech StormFilter. This is the size vault that will be required to treat the stormwater from the entire site.** **The sizing criteria is determined by the flow rate required to be treated from the entire site:** **Q (flow rate) = C*I*A** **C = runoff coefficient = 0.9 for this site** **I = design rainfall = 0.2 inches/hour** **A = area in acres** **Q = (0.9) * (0.2 in/hr) * (17,500/43,560) = 0.0723 cfs = 32.5 gpm. Each cartridge can handle a flow of 15 gpm so 3 cartridges are required.**	**Appendix A**
E3	*The project proposes to have three underground levels for parking. Please be aware that all shoring for construction of the building must be maintained within the property lines. No construction tiebacks are allowed in the public right-of-way.* **Response:** **Comment acknowledged. Owner and Architect are looking at shoring options.**	
E4	*Please number each parking space as there are stalls that do not have adequate turning radius to pull in or back out. The 24' backup space is required for all parking stalls. There are columns along a row of parking spaces that provide less than 24' backup space.* **Response:** **Each parking space is numbered and dimensions shown for corresponding backup space.**	**A2.0, A2.1, A2.2, A2.3**
E5	Please correct the lane configuration in the traffic study for northbound California at Burlingame Ave as it is a two-through lanes, and a left-turn lane. **Response:** **Comment acknowledged by Owner and Traffic Engineer. Comment to be reviewed at a future revision.**	

MBH arch

E6	*There will be a queuing impact on Hatch Lane. Show a right-turn only restriction sign onto Howard Avenue.* **Response:** **Comment acknowledged by Owner and Traffic Engineer. Comment to be reviewed at a future revision.**	
E7	*Based on the traffic study, Howard/Lorton will need to be reviewed to determine the need for a traffic signal due to traffic exiting onto Howard.* **Response:** **Comment acknowledged by Owner and Traffic Engineer. Comment to be reviewed at a future revision.**	
E8	*How were the trip generations for the existing uses obtained? And when?* **Response:** **Comment acknowledged by Owner and Traffic Engineer. Comment to be reviewed at a future revision.**	
E9	*34% Pass-by reduction seems high as the majority of the building will be office.* **Response:** **Comment acknowledged by Owner and Traffic Engineer. Comment to be reviewed at a future revision.**	
E10	*There should be no reduction in off-street parking demands for a new project in the Downtown.* **Response:** **Comment acknowledged by Owner and Traffic Engineer. Comment to be reviewed at a future revision.**	

End of Comments

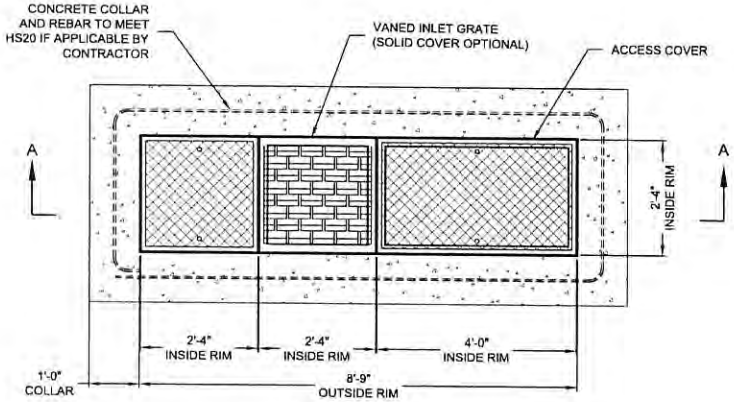

PLAN VIEW

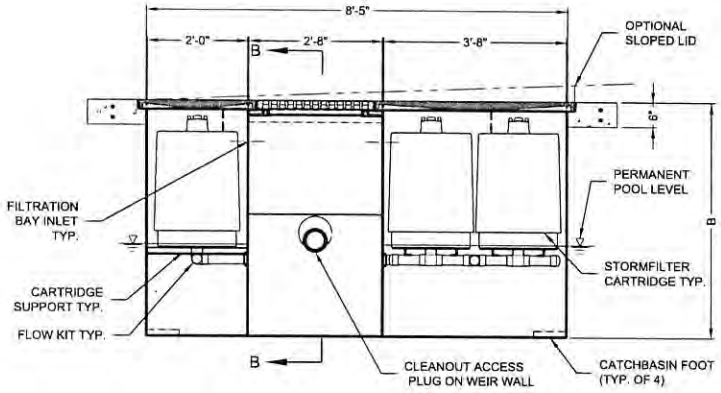

SECTION A-A

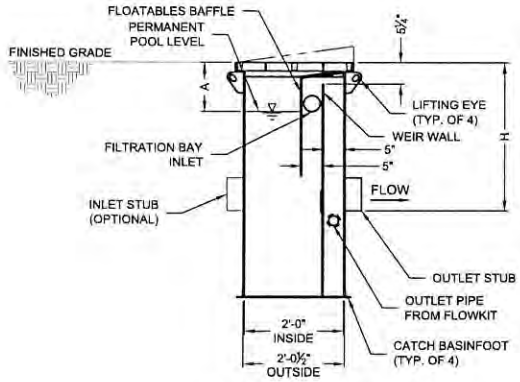

SECTION B-B

STORMFILTER CATCHBASIN DESIGN NOTES

STORMFILTER TREATMENT CAPACITY IS A FUNCTION OF THE CARTRIDGE SELECTION AND THE NUMBER OF CARTRIDGES. 3 CARTRIDGE CATCHBASIN HAS A MAXIMUM OF THREE CARTRIDGES. SYSTEM IS SHOWN WITH A 27" CARTRIDGE, AND IS ALSO AVAILABLE WITH AN 18" CARTRIDGE. STORMFILTER CATCHBASIN CONFIGURATIONS ARE AVAILABLE WITH A DRY INLET BAY FOR VECTOR CONTROL.
PEAK HYDRAULIC CAPACITY PER TABLE BELOW. IF THE SITE CONDITIONS EXCEED PEAK HYDRAULIC CAPACITY, AN UPSTREAM BYPASS STRUCTURE IS REQUIRED.

CARTRIDGE SELECTION

CARTRIDGE HEIGHT	27"		18"		18" DEEP	
MINIMUM HYDRAULIC DROP (H)	3.05'		2.3'		3.3'	
SPECIFIC FLOW RATE (gpm/sf)	2 gpm/ft²	1 gpm/ft²	2 gpm/ft²	1 gpm/ft²	2 gpm/ft²	1 gpm/ft²
CARTRIDGE FLOW RATE (gpm)	22.5	11.25	15	7.5	15	7.5
PEAK HYDRAULIC CAPACITY	1.0		1.0		1.8	
INLET PERMANENT POOL LEVEL (A)	1'-0"		1'-0"		2'-0"	
OVERALL STRUCTURE HEIGHT (B)	4'-9"		3'-9"		4'-9"	

GENERAL NOTES
1. CONTECH TO PROVIDE ALL MATERIALS UNLESS NOTED OTHERWISE.
2. FOR SITE SPECIFIC DRAWINGS WITH DETAILED STORMFILTER CATCHBASIN STRUCTURE DIMENSIONS AND WEIGHTS, PLEASE CONTACT YOUR CONTECH ANGINEERED SOLUTIONS LLC REPRESENTATIVE. www.ContechES.com
3. STORMFILTER CATCHBASIN WATER QUALITY STRUCTURE SHALL BE IN ACCORDANCE WITH ALL DESIGN DATA AND INFORMATION CONTAINED IN THIS DRAWING.
4. INLET SHOULD NOT BE LOWER THAN OUTLET. INLET (IF APPLICABLE) AND OUTLET PIPING TO BE SPECIFIED BY ENGINEER AND PROVIDED BY CONTRACTOR.
5. STORMFILTER CATCHBASIN EQUIPPED WITH 4 INCH (APPROXIMATE) LONG STUBS FOR INLET (IF APPLICABLE) AND OUTLET PIPING. STANDARD OUTLET STUB IS 8 INCHES IN DIAMETER. MAXIMUM OUTLET STUB IS 15 INCHES IN DIAMETER. CONNECTION TO COLLECTION PIPING CAN BE MADE USING FLEXIBLE COUPLING BY CONTRACTOR.
6. STEEL STRUCTURE TO BE MANUFACTURED OF 1/4 INCH STEEL PLATE. CASTINGS SHALL MEET AASHTO M306 LOAD RATING. TO MEET HS20 LOAD RATING ON STRUCTURE, A CONCRETE COLLAR IS REQUIRED. WHEN REQUIRED, CONCRETE COLLAR WITH QUANTITY (2) #4 REINFORCING BARS TO BE PROVIDED BY CONTRACTOR.
7. FILTER CARTRIDGES SHALL BE MEDIA-FILLED, PASSIVE, SIPHON ACTUATED, RADIAL FLOW, AND SELF CLEANING. RADIAL MEDIA DEPTH SHALL BE 7-INCHES. FILTER MEDIA CONTACT TIME SHALL BE AT LEAST 37 SECONDS.
8. SPECIFIC FLOW RATE IS EQUAL TO THE FILTER TREATMENT CAPACITY (gpm) DIVIDED BY THE FILTER CONTACT SURFACE AREA (sq ft).

INSTALLATION NOTES
A. ANY SUB-BASE, BACKFILL DEPTH, AND/OR ANTI-FLOTATION PROVISIONS ARE SITE-SPECIFIC DESIGN CONSIDERATIONS AND SHALL BE SPECIFIED BY ENGINEER OF RECORD.
B. CONTRACTOR TO PROVIDE EQUIPMENT WITH SUFFICIENT LIFTING AND REACH CAPACITY TO LIFT AND SET THE CATCHBASIN (LIFTING CLUTCHES PROVIDED).
C. CONTRACTOR TO TAKE APPROPRIATE MEASURES TO PROTECT CARTRIDGES FROM CONSTRUCTION-RELATED EROSION RUNOFF.

3-CARTRIDGE CATCHBASIN STORMFILTER DATA

STRUCTURE ID		XXX
WATER QUALITY FLOW RATE (cfs)		X.XX
PEAK FLOW RATE (<1 cfs)		X.XX
RETURN PERIOD OF PEAK FLOW (yrs)		XXX
CARTRIDGE FLOW RATE (gpm)		XX
MEDIA TYPE (CSF, PERLITE, ZPG, GAC, PHS)		XXXXX
RIM ELEVATION		XXX.XX'
PIPE DATA:	I.E.	DIAMETER
INLET STUB	XXX.XX'	XX"
OUTLET STUB	XXX.XX'	XX"

CONFIGURATION

SLOPED LID	YES\NO
SOLID COVER	YES\NO
NOTES/SPECIAL REQUIREMENTS:	

The Stormwater Management StormFilter®

APPENDIX A

CONTECH® ENGINEERED SOLUTIONS LLC
www.ContechES.com
9025 Centre Pointe Dr., Suite 400, West Chester, OH 45069
800-338-1122 513-645-7000 513-645-7993 FAX

3 CARTRIDGE CATCHBASIN
STORMFILTER
STANDARD DETAIL

I:\STORMWATER\CAD\MOP316 STORMFILTER\40 STANDARD DRAWINGS\CATCH BASIN SF\SFCB-SDWG\SFCB3-DTL.DWG 10/21/2014 8:43 AM

HIGHLAND
REALTY CAPITAL, INC

November 16, 2015

Mr. Kevin Gardiner
Planning Manager
City of Burlingame
501 Primrose Road, 2nd Floor
Burlingame, CA 94010

Re: Dewey Land Company, Inc. Project
225 California Drive, Burlingame

Dear Kevin:

I own Highland Realty Capital, Inc., a firm specializing in structuring the debt and equity capital solutions for real estate clients. We are located in Burlingame at 301 California Drive. Rich Dewey of Dewey Land Company called on me and asked if he could introduce himself and discuss the project his firm is proposing at 225 California. Mr. Dewey explained his firm's long-standing relationship in the City dating back sixteen years now, including its recent project at 1450 Chapin Avenue (which by the way, is a terrific and huge improvement over what was there.) Rich went on to discuss the plans for the redevelopment of the building his company recently acquired at 225 California.

In looking at the architecture, I think it is fantastic. The style is extremely elegant, and the use of the reliefs in the front elevation is a wonderful addition. The building fits in our downtown quite comfortably, and will be a strong and much needed addition to the office market in downtown Burlingame.

Some other comments: I am very impressed with the effort to go to three levels of parking. You rarely see a core downtown office project provide its own parking if located elsewhere. I think the step-back of the fourth floor at California Street measurably lowers the scale of the building; it's a good call. I also like the Hatch Alley architecture – it's a big improvement vs. other properties on Hatch Alley. Lastly, the colors are calming and attractive.

I request you share this letter with Bill Meeker and the members of the Planning Commission. I wholeheartedly support this project.

Sincerely,

Jeffrey K. Eliason
Principal

RECEIVED
NOV 20 2015
CITY OF BURLINGAME
COD-PLANNING DIV

301 California Drive, Suite 4, Burlingame, California 94010 / (t) 415-733-0050
San Francisco / **www.highlandrc.com** / Los Angeles

RECEIVED
FEB 22 2016
CITY OF BURLINGAME
PLANNING DIV

February 19, 2016

Planning Commission
City of Burlingame
501 Primrose Road
Burlingame, CA 94010

Dear Planning Commissioners:

I am writing to let you know that I support the Dewey Land project on California Avenue. The new design of the building is not only beautiful and classic, but it fits in well with our Downtown. Further, this building will bring new businesses, and with these new businesses will come employees to support the shops, cafes and restaurants in our City. This stretch of California Avenue is very tired and unattractive, the proposed building will go a long way to improve this area, and be an asset to our community.

Please vote in favor of the new building at 225 California. Thank you.

Sincerely,

Charne Morris
1220 El Camino Real
Burlingame, 94010

CD/PLG-Gardiner, Kevin

From: Marina Franco <[redacted]>
Sent: Tuesday, March 08, 2016 11:34 AM
To: CD/PLG-Gardiner, Kevin
Subject: Comments on 225 California Drive

Dear Mr. Gardiner and Honorable Members of the Burlingame Planning Department:

I write to express my concern at the size and scope at the project proposed for 225 California Drive. If projects of this magnitude are allowed in downtown Burlingame, the charm and beauty of what makes the downtown special will be completely eliminated.

By way of example, I am reminded of what University Avenue in Palo Alto looked like 20 years ago; it was an area that was an enjoyable to walk around, and not be subject to tall buildings with high wind corridors, and huge garages with queues of cars. I think of downtown Palo Alto now, with the crazy amount of traffic, congestion, trees blocked by tall buildings, and I fear that allowing commercial buildings of the nature of 225 California will turn downtown Burlingame into a simliar mess.

Moreover, while the address of the property is California Drive, the reality is that it really located on Highland Avenue which is a small little thoroughfare, one lane in each direction, which is not practical to handle the amount of traffic a project of this size. A garage of this nature when the train station is literally across the street is ridiculous, and flies in the face of a transit first approach to development.

Commissioners: I respectfully ask that you ask this project to pare down, in terms of size and scope, to make it more in line with the charm of downtown Burlingame. Keep what makes our City so great, its small town charm, and do not replace it with 4 story glass and concrete monstrosity. My family has owned property in Burlingame for over 50 years (our family home as well as rental units downtown) and we take pride in our ownership and pride in the City.

Thank you.

Marina Franco

RECEIVED
MAR - 8 2016
CITY OF BURLINGAME
CDD-PLANNING DIV.

RESOLUTION NO.

RESOLUTION OF THE PLANNING COMMISSION OF THE CITY OF BURLINGAME, APPROVING A REQUEST FOR COMMERCIAL DESIGN REVIEW FOR A NEW FOUR-STORY COMMERCIAL BUILDING AT 225 CALIFORNIA DRIVE, ON PROPERTY SITUATED WITHIN THE HOWARD MIXED USE (HMU) ZONE

RESOLVED, BY THE PLANNING COMMISSION OF THE CITY OF BURLINGAME THAT:

WHEREAS, an application has been made for Commercial Design Review for construction of a new 4-story commercial building at 225 California Drive, zoned HMU, DLC 225 California, 999 Baker Way, Suite 300, San Mateo, CA, 94404 property owner, APN: 029-211-080;

WHEREAS, said matters were heard by the Planning Commission of the City of Burlingame on April 11, 2016, at which time it reviewed and considered the staff report and all other written materials and testimony presented at said hearing;

NOW, THEREFORE, IT IS RESOLVED AND DETERMINED BY THIS PLANNING COMMISSION THAT:

Section 1. Said Commercial Design Review is approved subject to the conditions set forth in Exhibit "A" attached hereto. Findings for such Commercial Design Review are set forth in the staff report, minutes, and recording of said meeting.

Section 2. It is further directed that a certified copy of this resolution be recorded in the official records of the County of San Mateo.

_____
Chairman

I, _____, Secretary of the Planning Commission of the City of Burlingame, do hereby certify that the foregoing resolution was introduced and adopted at a regular meeting of the Planning Commission held on the 11th day of April, 2016 by the following vote:

_____
Secretary

EXHIBIT "A"

Conditions of approval for Commercial Design Review.

225 California Drive
Effective **April 21, 2016**

1. that the project shall be built as shown on the plans submitted to the Planning Division date stamped January 21, 2016, sheets A0.0 through A4.2, L-1.0 through L-4.0 and land survey and materials sheets; with the amendment that the four street trees shown on Sheet L-2.0 shall be specified as 'Acer rubrum' (red maple) rather than 'Quercus coccinea' (scarlet oak).

2. that prior to issuance of a building permit for construction of the project, the project construction plans shall be modified to include a cover sheet listing all conditions of approval adopted by the Planning Commission, or City Council on appeal; which shall remain a part of all sets of approved plans throughout the construction process. Compliance with all conditions of approval is required; the conditions of approval shall not be modified or changed without the approval of the Planning Commission, or City Council on appeal;

3. that any changes to the size or envelope of building, which would include changing or adding exterior walls or parapet walls, shall require an amendment to this permit;

4. that any changes to building materials, exterior finishes, windows, architectural features, roof height or pitch, and amount or type of hardscape materials shall be subject to Planning Division or Planning Commission review (FYI or amendment to be determined by Planning staff);

5. that the maximum elevation at the top of the roof shall not exceed elevation 86.32' for a maximum height of 55'-0", and that the top of each floor and final roof ridge shall be surveyed and approved by the City Engineer as the framing proceeds and prior to final framing and roofing inspections. The ground floor finished floor shall be elevation 31.32'; second floor finished floor shall be elevation 48.32'; third floor finished floor shall be elevation 60.65', fourth floor finished floor shall be elevation 72.98', and the roof level shall be elevation 86.32'. The top of the roof screen shall be elevation 90.32' and the top of the elevator and stair shaft shall be elevation 96.32'. Should any framing exceed the stated elevation at any point it shall be removed or adjusted so that the final height of the structure with roof shall not exceed the maximum height shown on the approved plans;

6. that the project shall include at least two dedicated off-street, car share parking spaces with the following requirements:

   a. the owner or designee shall record an easement for the car share spaces the car share spaces and said car shares spaces shall be maintained in perpetuity and cannot be modified without the City's consent;

   b. the car share spaces shall be clearly labeled both with painted in-ground signage as well as eye-level signage;

   c. the car share spaces shall be accessible to tenants of the building and at the discretion of the building owner may also be available to non-tenant subscribers from outside the building;

   d. the dimensions of the car share spaces shall be in accordance with requirements set forth in the Zoning Code for off-street parking spaces.

7. that the on-site parking spaces (excluding the car share spaces) shall be used only for the

tenants and visitors of the commercial/retail and office facilities on this site and shall not be leased or rented for storage of automobiles or goods either by individuals or businesses not on this site or by other businesses for off-site parking;

8. that the conditions of the Building Division's September 18, 2015, June 4, 2015 and April 29, 2015 memos; the Engineering Division's February 12, 2016, October 16, 2015, July 2, 2015 and April 23, 2015 memos; the Parks Division's February 6, 2016, September 30, 2015 and May 8, 2015 memos; the Fire Division's February 22, 2016, September 21, 2015, June 9, 2015 and May 19, 2015 memos; and the Stormwater Division's February 9, 2016, September 24, 2015, June 9, 2015 and April 27, 2015 memos shall be met;

9. that prior to issuance of a building permit for the project, the applicant shall pay the first half of the public facilities impact fee in the amount of $187,757.00, made payable to the City of Burlingame and submitted to the Planning Division;

10. that prior to scheduling the final framing inspection, the applicant shall pay the second half of the public facilities impact fee in the amount of $187,756.99., made payable to the City of Burlingame and submitted to the Planning Division;

11. that the project shall comply with the Construction and Demolition Debris Recycling Ordinance which requires affected demolition, new construction and alteration projects to submit a Waste Reduction plan and meet recycling requirements; any partial or full demolition of a structure, interior or exterior, shall require a demolition permit;

12. that demolition or removal of the existing structures and any grading or earth moving on the site shall not occur until a building permit has been issued and such site work shall be required to comply with all the regulations of the Bay Area Air Quality Management District;

13. that during construction, the applicant shall provide fencing (with a fabric screen or mesh) around the project site to ensure that all construction equipment, materials and debris is kept on site;

14. that storage of construction materials and equipment on the street or in the public right-of-way shall be prohibited;

15. that the applicant shall comply with Ordinance 1503, the City of Burlingame Storm Water Management and Discharge Control Ordinance;

16. that the project shall meet all the requirements of the California Building and Uniform Fire Codes, 2013 Edition, as amended by the City of Burlingame;

The following five (5) conditions shall be met during the Building Inspection process prior to the inspections noted in each condition:

17. that prior to scheduling the foundation inspection a licensed surveyor shall locate the property corners, set the building envelope;

18. that prior to the underfloor frame inspection the surveyor shall certify the first floor elevation of the new structure;

19. that prior to scheduling the framing inspection, the project architect, engineer or other licensed professional shall provide architectural certification that the architectural details such as window locations and bays are built as shown on the approved plans; if there is no licensed professional involved in the project, the property owner or contractor shall provide the certification under penalty of perjury. Certifications shall be submitted to the Building Division;

20. that prior to scheduling the roof deck inspection, a licensed surveyor shall shoot the height of the roof parapet and provide certification of that height to the Building Division;

21. that prior to final inspection, Planning Division staff will inspect and note compliance of the architectural details (trim materials, window type, etc.) to verify that the project has been built according to the approved Planning and Building plans;

Mitigation Measures from Initial Study

Aesthetics

22. The project developer shall install low-profile, low-intensity lighting directed downward to minimize light and glare. Exterior lighting shall be low mounted, downward casting, and shielded. In general, the light footprint shall not extend beyond the periphery of each property. Implementation of exterior lighting fixtures on all buildings shall also comply with the standard California Building Code (Title 24, Building Energy Efficiency Standards) to reduce the lateral spreading of light to surrounding uses, consistent with Burlingame Municipal Code Section 18.16.030 that requires that all new exterior lighting for commercial developments be designed and located so that the cone of light and/or glare from the light element is kept entirely on the property or below the top of any fence, edge or wall.

Air Quality

23. The contractor shall implement the following best management practices:

    a. All exposed surfaces (e.g., parking areas, staging areas, soil piles, graded areas, and unpaved access roads) shall be watered two times per day.

    b. All haul trucks transporting soil, sand, or other loose material off-site shall be covered.

    c. All visible mud or dirt track-out onto adjacent public roads shall be removed using wet power vacuum street sweepers at least once per day. The use of dry power sweeping is prohibited.

    d. All vehicle speeds on unpaved roads shall be limited to 15 miles per hour.

    e. All roadways, driveways, and sidewalks to be paved shall be completed as soon as possible. Building pads shall be laid as soon as possible after grading unless seeding or soil binders are used.

    f. Idling times shall be minimized either by shutting equipment off when not in use or

reducing the maximum idling time to five minutes (as required by the California airborne toxics control measure Title 13, Section 2485 of California Code of Regulations [CCR]). Clear signage shall be provided for construction workers at all access points.

g. All construction equipment shall be maintained and properly tuned in accordance with manufacturer's specifications. All equipment shall be checked by a certified mechanic and determined to be running in proper condition prior to operation.

h. Post a publicly visible sign with the telephone number and person to contact at the City of Burlingame regarding dust complaints. This person shall respond and take corrective action within 48 hours. Bay Area Air Quality Management District (BAAQMD) phone number shall also be visible to ensure compliance with applicable regulations.

Cultural Resources

24. In the event archaeological resources are encountered during construction, work will be halted within 100 feet of the discovered materials and workers will avoid altering the materials and their context until a qualified professional archaeologist has evaluated the situation and provided appropriate recommendations. If an archaeological site is encountered in any stage of development, a qualified archeologist shall be consulted to determine whether the resource qualifies as an historical resource or a unique archaeological resource. In the event that it does qualify, the archaeologist shall prepare a research design and archaeological data recovery plan to be implemented prior to or during site construction. The archaeologist shall also prepare a written report of the finding, file it with the appropriate agency, and arrange for curation of recovered materials.

25. A discovery of a paleontological specimen during any phase of the project shall result in a work stoppage in the vicinity of the find until it can be evaluated by a professional paleontologist. Should loss or damage be detected, additional protective measures or further action (e.g., resource removal), as determined by a professional paleontologist, shall be implemented to mitigate the impact.

26. In the event that human remains are discovered during project construction, there shall be no further excavation or disturbance of the site or any nearby area reasonably suspected to overlie adjacent human remains. The county coroner shall be informed to evaluate the nature of the remains. If the remains are determined to be of Native American origin, the Lead Agency shall work with the Native American Heritage Commission and the applicant to develop an agreement for treating or disposing of the human remains.

Geology and Soils

27. Project design and construction shall adhere to Title 18, Chapter 18.28 of the Burlingame Municipal Code, and demonstrate compliance with all design standards applicable to the California Building Code Zone 4 would ensure maximum practicable protection available to users of the buildings and associated infrastructure.

28. Project design and construction, including excavation activities, shall comply with Chapter 33 of the CBC, which specifies the safety requirement to be fulfilled for site work. This would include prevention of subsidence and pavement or foundations caused by dewatering.

29. The applicant shall prepare a monitoring program to determine the effects of construction on nearby improvements, including the monitoring of cracking and vertical movement of adjacent structures, and nearby streets, sidewalks, utilities, and other improvements. As necessary, inclinometers or other instrumentation shall be installed as part of the shoring system to closely monitor lateral movement. The program shall include a precondition survey including photographs and installation of monitoring points for existing site improvements.

Hazards and Hazardous Materials

30. The contractor shall comply with Title 8, California Code of Regulations/Occupational Safety and Health (OSHA) requirements that cover construction work where an employee may be exposed to lead. This includes the proper removal and disposal of peeling paint, and appropriate sampling of painted building surfaces for lead prior to disturbance of the paint and disposal of the paint or painted materials.

31. The applicant shall contract a Certified Asbestos Consultant to conduct an asbestos survey prior to disturbing potential asbestos containing building materials and shall implement the Consultant's recommendations for proper handling and disposal.

32. The applicant shall prepare, and submit, a Soils Management Plan (SMP) to the San Mateo County Health Department for approval, prior to the issuance of a building permit. The SMP will address the possibility of encountering subsurface contaminants, including groundwater, during construction activities, and the measures for identifying, handling, and disposing of subsurface contaminants. The SMP shall be submitted to the City prior to issuance of a building permit.

33. The contractor shall ensure the appropriate handling, storing, and sampling of any soil to be removed from the subject property, as per the SMP, so as to eliminate potential health and safety risks to the public, including construction workers.

34. In the event that groundwater, or other subsurface contaminants, are encountered during excavation, grading, or any other demolition/construction activities at the project site, the contractor shall ensure that the procedure for evaluating, handling, storing, testing, and disposing of contaminated groundwater is implemented, as per the SMP.

35. Workers handling demolition and renovation activities at the project site shall be trained in the safe handling and disposal of any containments with which they are handling or disposing of on the project site.

Noise

36. The contractor shall ensure that the interior noise levels are maintained at or below 50 dBA Leq (1-hr). Treatments would include, but are not limited to, sound-rated wall and window constructions, acoustical caulking, protected ventilation openings, etc. The specific determination of what noise insulation treatments are necessary shall be conducted on a room-by-room basis during final design of the project. Results of the analysis, including the description of the necessary noise control treatments, shall be submitted to the City, along with the building plans and approved design, prior to issuance of a building permit.

37. The contractor shall install forced-air mechanical ventilation, as determined by the local

building official, for all exterior-facing rooms of the office building so that windows can be kept closed at the occupant's discretion to control interior noise and achieve the interior noise standards.

38. The use of typical vibration-generating construction equipment, such as hoe rams, dozers, and drills, shall be prohibited within 10 feet of any adjacent commercial building. The use of heavy vibration-generating construction equipment, such as vibratory rollers or clam shovel drops, within 25 feet of any adjacent commercial/residential building shall be prohibited as well; or

    Alternatively, a construction vibration monitoring plan shall be implemented to document conditions prior to, during, and after vibration generating construction activities. All plan tasks shall be undertaken under the direction of a licensed Professional Structural Engineer in the State of California or other qualified persons as determined by the City and be in accordance with industry-accepted standard methods. The construction vibration monitoring plan shall be implemented to include the following tasks:

    - Identification of the sensitivity of nearby structures to groundborne vibration. Vibration limits shall be applied to all vibration-sensitive structures located within 50 feet of the project site.
    - Performance of a photo survey, elevation survey, and crack monitoring survey for each structure within 50 feet of construction activities identified as sources of high vibration levels. Surveys shall be performed prior to any construction activity, in regular interval during construction and after project completion and shall include internal and external crack monitoring in structures, settlement, and distress and shall document the condition of foundations, walls and other structural elements in the interior and exterior of said structures.
    - Development of a vibration monitoring and construction contingency plan to identify structures where monitoring would be conducted, set up a vibration monitoring schedule, define structure-specific vibration limits, and address the need to conduct photo, elevation, and crack surveys to document before and after construction conditions. Construction contingencies would be identified for when vibration levels approached the limits.
    - At a minimum, vibration monitoring shall be conducted during demolition, excavation, and foundation construction. Monitoring results may indicate the need for more or less intensive measurements.
    - If vibration levels approach limits, suspend vibratory construction activities or methods and implement contingencies to either lower vibration levels or secure the affected structures.
    - Designate a person responsible for registering and investigating claims of excessive vibration. The contact information of such person shall be clearly posted on the construction site.
    - Conduct post-survey on structures where either monitoring has indicated high levels or complaints of damage has been made. Make appropriate repairs or provide compensation where damage has occurred as a result of construction activities.

    The results of all vibration monitoring shall be summarized and submitted in a report shortly after substantial completion of each phase identified in the project schedule. The report will include a description of measurement methods, equipment used, calibration certificates, and graphics as required to clearly identify vibration monitoring locations. An explanation of all events that exceeded vibration limits will be included together with proper documentation supporting any such claims.

39. Mitigation Measure NOI-4:
    - Noise-generating activities at the construction site or in areas adjacent to the construction site associated with the project in any way will be restricted to the hours of 7:00 am to 7:00 pm, Monday through Friday, and 9:00 am to 6:00 pm on Saturdays, and 10:00 am to 06:00pm on Sundays and holidays.
    - Construct solid plywood fences around the construction site adjacent to operational businesses, residences, or other noise-sensitive land uses.
    - A temporary noise control blanket barrier could be erected, if necessary, along building facades adjoining the construction site. This mitigation would only be necessary if conflicts occurred which were irresolvable by proper scheduling. Noise control blanket barriers can be rented and quickly erected.
    - All internal combustion engine driven equipment will be equipped with intake and exhaust mufflers which are in good condition and appropriate for the equipment.
    - Unnecessary idling of internal combustion engines shall be strictly prohibited.
    - Stationary noise generating equipment (e.g., concrete crusher) will be located as far as possible from sensitive receptors, and acoustically shielded with temporary noise barriers, material stockpiles, etc. to reduce noise levels at nearby residences. The noise barriers shall provide a break in the line-of-sight between the equipment and the nearest receptors, which would result in a minimum noise reduction of 5 dBA.
    - "Quiet" air compressors and other stationery noise sources will be utilized where technology exists. The "quiet" equipment shall be a minimum of 5 dBA lower in noise level than conventional equipment.
    - Control noise from construction workers' radios to a point where they are not audible at existing residences bordering the project site.
    - The contractor will prepare a detailed construction plan identifying the schedule for major noise-generating construction activities. This plan shall be distributed to noise-sensitive uses within 1,200 ft of the project site.
    - A "disturbance coordinator" will be designated, and will be responsible for responding to any local complaints about construction noise. The disturbance coordinator will determine the cause of the noise complaint (e.g., starting too early, bad muffler, etc.) and will require that reasonable measures warranted to correct the problem be implemented as soon as possible. A telephone number for the disturbance coordinator shall be posted at the construction site and included in the notices sent to neighbors regarding the construction schedule. The construction contractor will log construction noise complaints, the causes of the complaints, and the measures implemented to address the complaints. The log will be provided to the City upon request.

Transportation and Traffic

40. Prior to issuance of grading and building permits, the project applicant shall submit a Traffic Control Plan. The requirements within the Traffic Control Plan include, but are not limited to, the following: truck drivers would be notified of and required to use the most direct route between the site and U.S. 101, as determined by the City Engineering Department; all site ingress and egress would occur only at the main driveways to the project site; specifically designated travel routes for large vehicles would be monitored and controlled by flaggers for large construction vehicle ingress and egress; warning signs indicating frequent truck entry and exit would be posted on adjacent roadways if requested; and any debris and mud on nearby streets caused by trucks would be monitored daily and may require instituting a street cleaning program. In addition, eight

loads of heavy equipment being hauled to and from the site each month would be short-term and temporary.

Utilities

41. The applicant shall prepare a report to determine if the water and sewer main requires upsizing. This analysis will be reviewed by the City and if required, the applicant will be required to pay for their pro-rata share of the upsizing or a designated run of the line, the details of which would be determined by the Department of Public Works prior to building permit approval.

RESOLUTION NO. _____

RESOLUTION OF THE PLANNING COMMISSION OF THE CITY OF BURLINGAME FINDING THAT THERE IS NO SUBSTANTIAL EVIDENCE THAT THE APPROVAL OF A REQUEST FOR COMMERCIAL DESIGN REVIEW FOR A NEW FOUR-STORY COMMERCIAL BUILDING LOCATED AT 225 CALIFORNIA DRIVE WILL HAVE A SIGNIFICANT EFFECT ON THE ENVIRONMENT UNDER THE CALIFORNIA ENVIRONMENTAL QUALITY ACT (CEQA) PURSUANT TO ARTICLE 6 OF THE CEQA GUIDELINES

THE PLANNING COMMISSION OF THE CITY OF BURLINGAME hereby finds as follows:

Section 1. On the basis of the Initial Study and the documents submitted and reviewed, and comments received and addressed by this commission, it is hereby found that there is no substantial evidence that the project set forth above will have a significant effect on the environment, and a Mitigated Negative Declaration, per Mitigated Negative Declaration ND-588-P, is hereby approved.

Section 2. It is further directed that a certified copy of this resolution be recorded in the official records of the County of San Mateo.

_____
Chairman

I, _____, Secretary of the Planning Commission of the City of Burlingame, do hereby certify that the foregoing resolution was introduced and adopted at a regular meeting of the Planning Commission held on the 11th day of April, 2016 by the following vote:

_____
Secretary

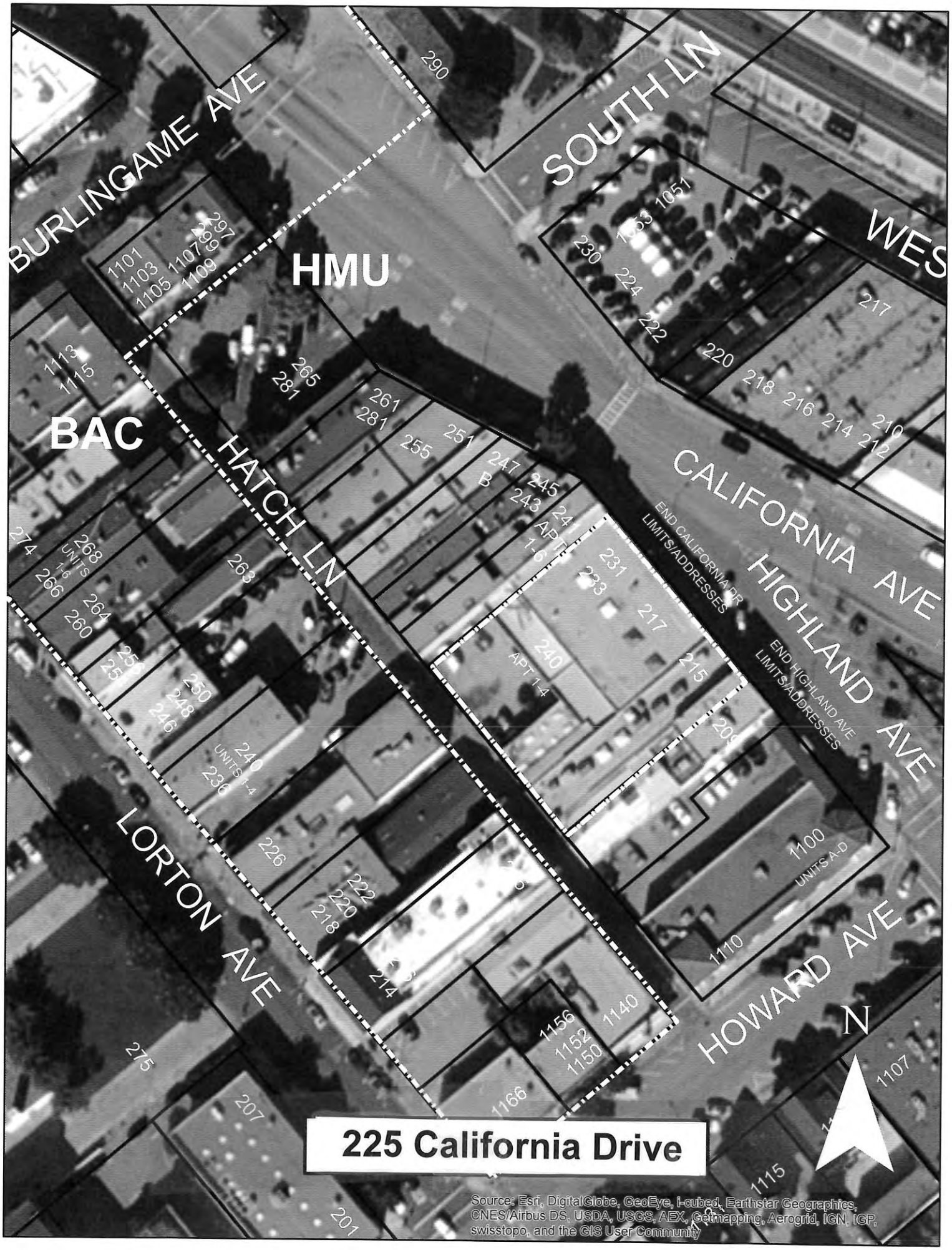
225 California Drive
BURLINGAME AVE
SOUTH LN
HMU
BAC
HATCH LN
CALIFORNIA AVE
HIGHLAND AVE
LORTON AVE
HOWARD AVE
END CALIFORNIA DR LIMITS/ADDRESSES
END HIGHLAND AVE LIMITS/ADDRESSES
N
Source: Esri, DigitalGlobe, GeoEye, i-cubed, Earthstar Geographics, CNES/Airbus DS, USDA, USGS, AEX, Getmapping, Aerogrid, IGN, IGP, swisstopo, and the GIS User Community